KE CRANE

HENAN KE CRANE CO., LTD

电磁铁产品样册

Electromagnet product sample book

CONTACT US

: www.kecrane.com

: info@kecrane.com

: +86 371-85908747

: Zhengzhou, Henan Province

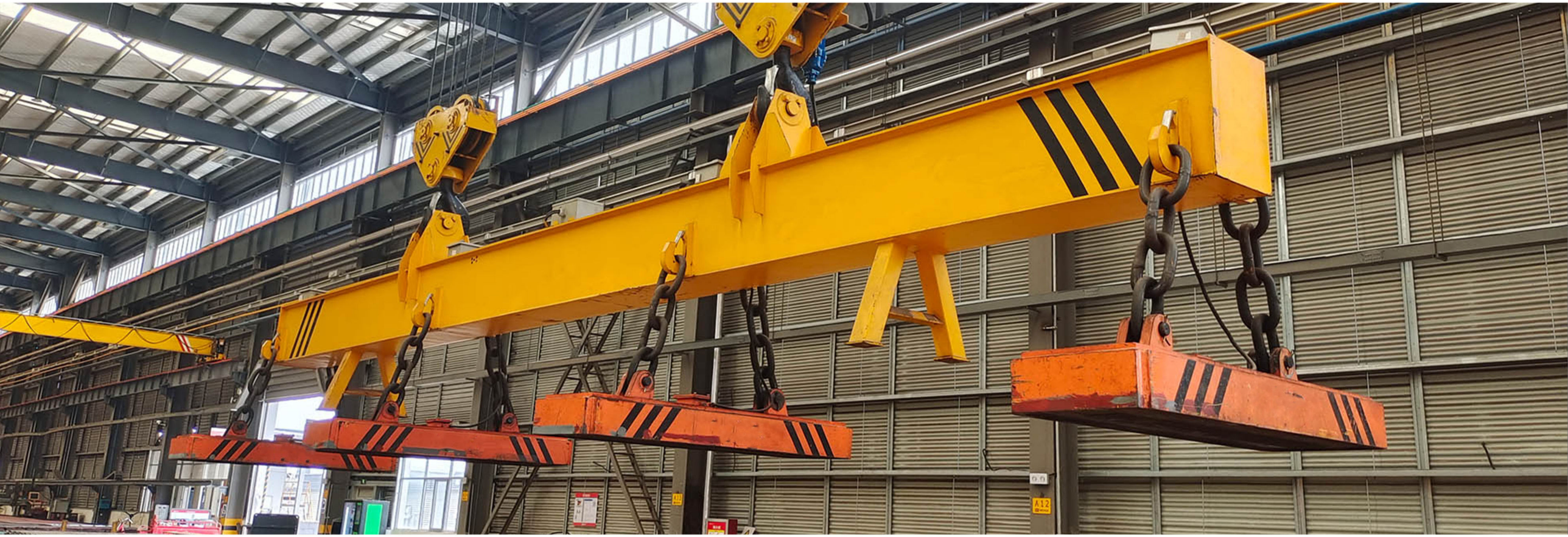

COMPANY PROFILE

KE Crane is a professional crane manufacturer integrating R&D, manufacturing, sales, installation and service. With a wide range of products and a global selection of raw materials, we are committed to providing custom designed material handling solutions for both standard and custom cranes.

We have served more than 6,000 customers in over 100 countries and territories worldwide. Industries served include over 50 key industry sectors such as aerospace, automotive and marine, steel smelting, petrochemical, electronics and information technology, power and water conservancy, and military rail, and our products have been operating effectively and safely. We promise to provide a 12-month warranty and permanent technical service support for all our products.

Our factory covers an area of 1.62 million square metres and has more than 4,500 employees, including more than 200 senior engineers and technicians. There are more than 20 production workshops with more than 3,500 sets of various advanced processing equipment and product test benches. We use globally selected raw materials to improve product quality to the maximum extent while reducing costs. We provide R&D, production, sales and services for more than 110 types of cranes and accessories such as gantry cranes, overhead cranes, electric hoists, lifting electromagnets and lifting grabs. We can provide total solutions and whole life cycle services for our customers and are committed to the intelligent, environmentally friendly and high quality development of the crane industry.

Qualification certificate

KE CRANE

概述
General

起重电磁铁是以被吸物作为衔铁的一种特殊电磁铁。它是利用电与磁的物理量吸住铁磁性物质的设备，是冶金、矿山、机械、造船、交通运输等行业吊运钢铁等导磁性物料不可缺少的起重工具，在某些领域，它又用作电磁机械手、磁力对中、棒材定尺用等诸多方面。经过多年的推广应用，起重电磁铁的用途已广泛拓展，由于被吸物的多样性，起重电磁铁的结构、磁路分布、制造工艺亦不同，故形成了多个系列产品，针对性很强。

Lifting Electromagnet is special equipment which utilizes the electric & magnetic physical quantity to lift attached materials and has become indispensable when to lift and transport ferromagnetism materials in lines of metallurgy mine machinery sipbuilding and transportation etc. and it can also be used as electromagnetic manipulator magnetic force centering bar length fixing and so on in some fields As the attached materials are diverse the electromagnet structure magnetic circuit and manufacturing process are also different so there are many series of strong targeted products.

特点 Features

1、采用全密封结构，防潮性能好；非磁性保护板采用轧制锰板，可焊性好，隔磁性能好，耐磨、耐冲击。
2、通过消化国外先进技术，并经过完善及创新，及经计算机优化设计，产品结构合理、自重轻、吸力大、能耗低。
3、励磁线圈经特殊工艺处理，提高了线圈的电气和机械性能，绝缘材料耐热等级达到C级，使用寿命长。
4、普通型电磁铁的额定持续率由过去的50%提高到60%，提高了电磁铁的使用效率。
5、超高温型电磁铁采用独特的隔热和防热辐射措施，其被吸物温度由过去的600℃提高到700℃，扩展了电磁铁的适用范围。
6、提供控制柜、电缆卷筒等辅助设备，成套性好。
7、安装、运行、维护简便。

1.Adopt totally sealing structure with good property of moisture—proofing.Non—magnetic fender is made of rolled Mn plate which has good property of weldablity magnetism—isolation wear—resistant and shockproof.
2.Overseas technology has been introduced improved innovated as well as get optimum designed by computer to make our products reasonable structure light self—weight strong attraction force and low energy consumption.
3.The energizing coils have been processed by special technology and thus its property of electrical and mechanical gets enhanced.Heat—resistant of insulating material reaches grade C and service life is long.
4.Rated duty cycle of normal electromagnet gets increased from 50% in the past to 60% thus working efficiency gets improved.
5.Ove—High temperature electromagnet adopts unique isolation from heat and radiation the temperature of attached materials gets increased from 600℃ in the past to 700℃ which expands application range of electromagnet.
6.A full set of auxiliary unit such as control Cubicle Cable Reel etc can be provided as well.
7.Installation operation and maintainance are convenient

目　录 Table of Contents

型号说明 Model Designation

MW□-□ □/□

- 辅助规格代号Auxiliary specification code
  - “1”表示常温型(≤150℃)stands for normal temperature type
  - “2”表示高温型(≤600℃)stands for high temperature type
  - “3”表示超高温型(≤700℃)stands for over-high temperature type
  - 附带“-QS”表示潜水型 " -QS " stands for dvcing type
  - 附带“-QC”表示强磁型 " -QC " stands for strong magnetic type
  - 附带“-75”表示高频型 " 75 " stands for high frequency type
- 派生代号 Derived code
  - “L”表示铝导线 " L " stands for aluminum wire
  - “T”表示铜导线 " T " stands for copper wire
- 基本规格代号Basic specification code
  - 圆形电磁铁表示直径(cm) (cm)stands for diameter(cm)(round electromagnet)
  - 方形电磁铁表示长X宽(cm) (cm)stands for length × width(cm)(rectangular electromagnet)
- 类组代号type code
- 起重电磁铁lifting electromagnet

选型指南 Guide for mode Selection

我公司磁起重产品众多，针对性较强，请您按以下选型指南对照选型

Our company has various kinds of products for meeting specific requirement.Please choose the right model according to the following guide.

1、根据被吸物选择合适的系列，可参照下表：

Choose the suitable series according to the attached materials,refer to the table below.

电磁铁系列 Series of electromagnet	被吸物举例 Examples of attached materials	备注 Remark
5	铸铁锭、钢球、各类废钢、铁粉 cast iron ingot,steel ball,steel scraps,iron powder	散料或打包废钢 Balk cargo or packed scraps
61	各类废钢 various steel scrap	为窄小的车箱状容器量身定做 made for narrow trunk-shaped container
19	盘圆（高线）专用 special for coiled bar(high speed wire)	与盘圆两点接触结构、重量轻、吸力大 contacted with two points of the wire rod,light,large attraction
18	捆轧螺纹钢、小圆钢、型材 Boundled Rebar,small round steel,profiled steel	双线圈结构、透磁深度大 double coils,deep penetration
38	捆轧螺纹钢、小圆钢、型材 Boundled Rebar,small round steel,profiled steel	标准化、系列化、透磁深度大 standardization,seriation and deep penetration
22	方坯、矩形坯、钢锭、型钢等 billet,bloom,steel ingot, profiled steel,etc	标准化、系列化 standardization,seriation
32	方坯、矩形坯、钢锭、型钢等 billet,bloom,steelingot, profiled steel,etc	标准化、系列化、透磁深度大 standardization,seriation and deep penetration
42	方坯、矩形坯、钢锭、型钢等 billet,bloom,steel ingot, profiled steel,etc	狭小面积产生强大吸力 Strong attracting force is formed in narrow area
92	方坯、矩形坯、钢锭、型钢等 billet,bloom,steel ingot, profiled steel,etc	活动磁极结构 movable magnetic pole structure
25	钢管、圆坯等 steel pipe, round,etc	标准化、系列化 standardization,seriation
35	钢管、圆坯等 steel pipe, round,etc	标准化、系列化、透磁深度大 standardization,seriation and deep penetration
85	特大口径钢管 Super-dia pipe	标准化、系列化、专用型、大口径设计 standardization,seriation,special design for larger dia

17	型钢、重轨、异形坯等 profiled steel,heavy rail,beam blank,etc	标准化，系列化 standardization,seriation
27	型钢、重轨、异形坯等 profiled steel,heavy rail,beam blank,etc	自重轻，多台联吊超长重轨 light self-weight,overlength heavy rail by combined units
37	型钢、重轨、异形坯等 profiled steel,heavy rail,beam blank,etc	专业型、透磁深度大 special type and deep penetration
03	大型钢锭、连铸板坯、厚钢板 large steel ingot,cocast slab caster,thick steel plate	专为吊运厚料设计 for thick materials
84	宽厚板、中厚板专用 for wide & thick plate and medium-thick plate	含超薄(δ≤4mm)钢板；大型可吊特多张系列 includes ultrathin(δ≤4mm)steel plate;series large-size type can lift many sheets
04	单张钢板 single sheet	工作机械上的电磁夹具、切割工位特适用 suitable for electromagnetic clamp and cutting post
16、26、36	钢带卷专用 For coiled steel	吊运对卷无损伤，最理想吊具，拥有专利两项 Coiled steel will no get damaged during being lift;the most ideal lifting tool;we own two patents

2、起重机规格、吨位、起升高度、起升主钩抱闸类型，容量。——建议提供。
The specification,tonnage,hoist height,brake type of hook,capacity.——should be provided.

3、根据物料温度选择常温型、高温型或超高温型，低于150℃为常温型，高于150℃低于600℃为高温型，超过600℃为超高温型。
Choose normal or high or super-high temperature type according to the material's temperature.If below l50℃ choose normal type,between 150℃ and 600℃ high type;above 600℃ but with a limit under 700℃,supe-high type.

4、作业频率。超过60%为高频型。
Duty cycle:when exceed 60%,choose high frequency type.

5、液体中吸料选择潜水型，提供液体介质和潜水深度。
When operation is in liquid,please choose diving type and provide us with liquid medium and diVing depth.

6、吊运型材、板材等物料时提供物料几何参数(长、宽、厚或直径等)及须吊根数或张数、捆数等。
Please provide with geometry parameters(such as length,width,depth,diameter and so on.)and number of pieces or bundles to lift when lift section material,sheet material.

7、配套设备选型
Pattern Selection of corollary equipments.

7.1单台使用时，按消耗功率(电流)选择控制柜及辅助设备；多台联用时，按联用台数的消耗功率(电流)之和选择。
For single unit,Choose control cubicle and other assistant equipment according to consumed power(current);for combined unit,we need total amount of comsumed power(current).

7.2按起升高度确定电缆卷筒卷取长度，按电磁铁功率(电流)确定电缆卷筒容许电流，按电磁铁台数及分组情况确定电缆卷筒的芯数。
Lifting height determines the length of cable coiled on cable reel.The power of electromagnet(current)determines current tolerance of cable reel.Pieces of the electromagnets and grouping condition determines numbers of core.

8、永磁起重器选型方法单独列出，详见《永磁起重器选型指南》
Pattern selection of permanent magnet lifter has been listed separately.See Pattern selection of permanent manget lifter.

由于客户现场情况的多样性、复杂性，以上几点可能对您选型仍有难度，您可与我公司技术部门联系，我们将为您提供最佳方案。
Owing to diversity and complexity situation site,when you feel difficult in model selection,you can contact with our technical department and we will provide you with the optimal approach.

注：本样本提供各系列产品外型尺寸、参数仅供选型参考使用。我们将起重电磁铁按照被吸物的种类予以区分，使用户根据实际使用条件选取某系列产品，再结合被吸物的种类、质量及尺寸等条件选用相应型号的品种。
Note:All dimensions and parameters provided by this catalog are.just for reference.The real size depends on actual product. We divide types of electromagnet as per different kind of materials for the convenience of customer to choose right type on base of their practical requirement.

废钢类起重电磁铁
Lifting Electromagnet For Steel Scraps

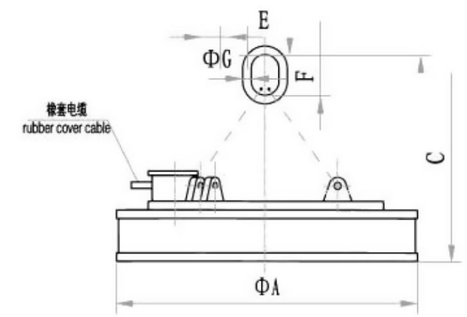

外形尺寸图
Overall Dimension Drawing

MW5系列 Series MW5

本系列用于吸吊铸铁锭、钢球、生铁块、机加切屑；铸造厂的各种杂铁、回炉料、切料头；打包废钢等。在炉渣处理工艺中，用于先期除去大型铁件，另外在洗煤厂吊运铁粉等。双室式出线盒，特设超厚出线盒保护板，引出电缆防扭设置。其励磁方式可以采用：额定电压DC220v方式；强励磁方式；过励磁方式。

Suitable for cast ingot,steel ball,iron,machine chip,for various kinds of steel scraps,return scraps,cropping,baling scraps and etc in foundry factories and for iron powder in coal washery,During slag disposal process,it can remove large size of iron at initial step,Outlet box has two chambers,an extra-thick fender and an anti-twist setting,There are therr excitation options;rated voltage DC220V;strong excitation;over excitation.

MW5常温型 Series MW5 Normal Temperature Type

主要技术参数(额定电压DC-220V,通电持续率TD-60%)
Main technical data (rated voltage DC-220,duty cycle TD-60%)

型号 Model	冷态功率 Cold-state Power (kw)	电流A Current A (冷态/热态) cold/hot state	外形尺寸(mm) overall dimension					质量 mass (kg)	起重能力 lifting capacity(kg) (冷态/热态 cold/hot state)		
			A	C	F	E	G		钢球 steel ball	铸铁锭 casting ingot	切屑 turnings
MW5-50L/1	2.6	11.8/7.7	500	700	160	90	25	220	1200	220/130	80/65
MW5-60L/1	3.0	13.6/8.9	600	750	160	90	25	340	2000	290/170	95/80
MW5-70L/1	3.3	15/9.8	700	800	160	90	30	490	2500	380/200	120/100
MW5-80L/1	4.0	18/12	800	800	160	90	30	620	3000	480/250	150/130
MW5-90L/1	5.9	26.8/17.5	900	1090	200	125	40	800	4500	600/400	250/200
MW5-110L/1	7.7	35/22.8	1100	1140	220	150	45	1350	6500	1000/800	450/400
MW5-120L/1	10	45.5/29.5	1200	1100	220	150	45	1700	7500	1300/1000	650/500
MW5-130L/1	12	54.5/35.5	1300	1240	250	175	50	2010	8500	1400/1100	700/600
MW5-150L/1	15.6	70.9/46.1	1500	1250	350	210	60	2830	11000	1900/1500	1100/900
MW5-165L/1	16.5	75/48.8	1650	1590	370	230	75	3200	12500	2300/1800	1300/1100
MW5-180L/1	22.5	102.3/66.5	1800	1490	370	230	75	4230	14500	2750/1100	1600/1350

废钢类起重电磁铁
Lifting Electromagnet For Steel Scraps

MW5-210L/1	28.4	129/84	2100	1860	400	250	80	7000	21000	3500/2800	2200/1850
MW5-240L/1	33.9	154/100	2400	2020	450	280	90	9000	26000	4800/3800	2850/2250
MW5-260L/1	35.6	162/105	2600	2100	450	280	90	10100	30000	6100/4900	3600/3850
MW5-280L/1	39	178/116	2800	2700	500	300	100	12450	34000	7100/5700	4450/3400
MW5-300L/1	41.6	189/123	3000	2300	500	300	100	14980	39000	8350/6700	5250/4100

注：潜水型起重电磁铁技术参数与常规型产品型相同，其中引出电缆和出线盒、焊接等作特殊工艺处理，电缆长度按定货要求。
Note:technical data of diving type is the same as that of normal type, While some special technology like outlet cable,outlet box and welding process will be coped differently, The length of cable depends on customers'requirement.

MW5高频型 Series MW5 High Frequency Type

主要技术参数(额定电压DC-220V,通电持续率TD-75%)
Main technical data（rated voltage DC-220,duty cycle TD-75%）

型号 Model	冷态功率 Cold-State Power (kw)	电流A Current A (冷态/热态) cold/hot state	外形尺寸(mm) overall dimension					质量 mass (kg)	起重能力 lifting capacity(kg) (冷态/热态 cold/hot state)		
			A	C	F	E	G		钢球 steel ball	铸铁锭 casting ingot	切屑 turnings
MW5-50L/1-75	2.0	9.1/6	500	700	160	90	25	253	1200	220/130	80/65
MW5-60L/1-75	2.32	10.6/6.9	600	750	160	90	25	390	2000	290/170	95/80
MW5-70L/1-75	2.55	11.6/7.6	700	800	160	90	30	550	2500	380/200	120/100
MW5-80L/1-75	3.1	14.1/9.2	800	850	160	90	30	690	3000	480/250	150/130
MW5-90L/1-75	4.6	21/13.6	900	1160	200	125	40	885	4500	600/400	250/200
MW5-110L/1-75	6.1	27.7/18	1100	1270	220	150	45	1500	6500	1000/800	450/400
MW5-120L/1-75	7.4	33.6/21.9	1200	1220	220	150	45	1850	7500	1300/1000	600/500
MW5-130L/1-75	9	40.9/26.6	1300	1290	250	175	50	2280	8500	1400/1100	700/600
MW5-150L/1-75	11.3	51.4/33.4	1500	1360	350	210	60	3180	11000	1900/1500	1100/900
MW5-165L/1-75	12.2	55.5/36	1650	1670	370	230	75	3840	12500	2300/1800	1300/1100
MW5-180L/1-75	16.3	74.1/48.2	1800	1800	370	230	75	4690	14500	2750/2100	1600/1350
MW5-210L/1-75	21.7	98.6/64.1	2100	1900	400	250	80	7500	21000	3500/2800	2200/1850
MW5-240L/1-75	25.9	117.7/76.5	2400	2100	450	280	90	9800	26000	4800/3800	2850/2250
MW5-260L/1-75	27.5	125/83	2600	2150	450	280	90	11000	30000	6100/4900	3600/2850
MW5-280L/1-75	30.5	139/90	2800	2250	500	300	100	13600	34000	7100/5700	4450/3400
MW5-300L/1-75	32.5	148/96	3000	2350	500	300	100	16500	39000	8350/6700	5250/4100

废钢类起重电磁铁
Lifting Electromagnet For Steel Scraps

MW5高温型 Series MW5 High Temperature Type

主要技术参数 高温型(700℃以下，额定电压DC-220V,通电持续率TD-60%)
Main technical data（rated voltage DC-220,duty cycle TD-60%）

型号 Model	冷态功率 Cold-state Power (kw)	电流A Current A (冷态/热态) cold/hot state	外形尺寸(mm) overall dimension					质量 mass (kg)	起重能力 lifting capacity(kg) (冷态/热态 cold/hot state)		
			A	C	F	E	G		钢球 steel ball	铸铁锭 casting ingot	切屑 turnings
MW5-50L/2	2.0	9.1/6	500	700	160	90	25	220	1200	220/130	80/65
MW5-60L/2	2.3	10.5/6.8	600	750	160	90	25	395	2000	290/170	95/80
MW5-70L/2	2.8	12.7/8.3	700	800	160	90	30	520	2500	380/200	120/100
MW5-80L/2	3.54	16.1/10.5	800	850	160	90	30	650	3000	400/250	150/130
MW5-90L/2	4.5	20.5/13.3	900	1160	200	125	40	900	4500	600/400	250/200
MW5-110L/2	6	27.3/17.7	1100	1270	220	150	45	1500	6500	1000/800	450/400
MW5-120L/2	7.4	33.6/21.9	1200	1220	220	150	45	1800	7500	1300/1000	600/500
MW5-130L/2	8.9	40.5/26.3	1300	1290	250	175	50	2100	8500	1400/1100	700/600
MW5-150L/2	11.3	51.4/33.4	1500	1360	350	210	60	3200	11000	1900/1500	1100/900
MW5-165L/2	13.3	60.5/39.3	1650	1670	370	230	75	3500	12500	2300/1800	1300/1100
MW5-180L/2	20.9	95/61.8	1800	1800	370	230	75	4500	14500	2750/2100	1600/1350
MW5-210L/2	22.9	104.1/67.7	2100	1900	400	250	80	7500	21000	3500/2800	2200/1850
MW5-240L/2	26	118.2/76.8	2400	2100	450	280	90	9800	26000	4800/3800	2850/2250
MW5-260L/2	27.5	125/83	2600	2150	450	280	90	11000	30000	6100/4900	3600/2850
MW5-280L/2	30	136/89	2800	2200	500	300	100	13700	34000	7100/5700	4450/3400
MW5-300L/2	32	146/95	3000	2350	500	300	100	16480	39000	8350/6700	5250/4100

MW5强磁型 Series MW5 Strong Magnet Type

针对钢铁厂的大容量炼钢炉，频繁装卸各种轻杂废料的需要，我公司技术人员通过创新开发出了大型强磁型电磁铁，其吸力高出普通型约30%以上。特别适用于电炉炼钢上料流程。已广泛应用于国内各大钢铁公司，用户反映良好。

We have developed a large size of strong magnet with attraction force 30% higher than normal type for frequently loading and discharging some light-weight scraps at big capacity melting furnaces,They are especially suitable for feeding during electric steel-making process.The products have already been applied widely in various national steel companies and got good feedback.

主要技术参数（额定电压DC-220V）Main technical data（rated voltage DC-220V）

型号 Model	电压 voltage (v)	冷态功率 Cold-state Power (kw)	电流A Current A (冷态/热态) cold/hot state	起重能力 lifting capacity(kg) (冷态/热态 cold/hot state)			外形尺寸(mm) overall dimension					质量 mass (kg)
				钢球 steel ball	铸铁锭 casting ingot	切屑 turnings	A	C	F	E	G	
MW5-165L/1-QC	400/200	17.6	80/52	13500	2650/2100	1500/1300	1650	1730	370	230	75	4250
MW5-180L/1-QC	400/200	22.8	104/67.4	16000	3100/2400	1900/1600	1800	1870	370	230	75	5600
MW5-210L/1-QC	400/200	32.6	148/96	23100	4000/3200	2600/2180	2100	1980	400	250	80	8300
MW5-240L/1-QC	400/200	43	195/127	28600	5500/4400	3360/2650	2100	2200	450	280	90	10800

废钢类起重电磁铁
Lifting Electromagnet For Steel Scraps

MW61系列 Series MW61

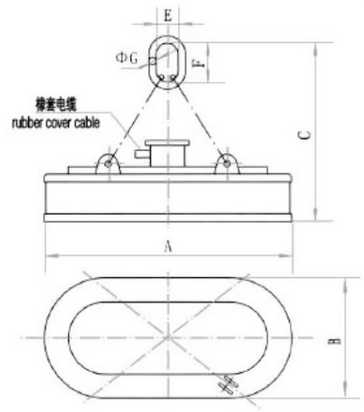

外形尺寸图
Overall Dimension Drawing

本系列用于窄小的车箱状容器内高效地装卸废钢铁。根据车箱形状量身定做，对于吊运废钢，电磁铁一般设计成两头半圆形的结构，故又称椭圆形电磁铁。由于各个钢铁企业的料斗尺寸不一，故规格在不断增加中，以下所列表型号仅供参考。特殊尺寸可定制。

It can load & unload steel scraps efficiently at narrow trunk-shaped container and is called oval shape electromagnet owing to its special half-round structure.As chute dimensions in various steel companies are different,the following sample is just for your reference.And we can make the specific one as per your requirement.

MW61常温型 Series MW61 Normal Temperature Type

主要技术参数 (额定电压DC-220V) Main technical data (rated voltage DC-220)

型号 Model	冷态功率 Cold-state Power (kw)	冷态电流 cold-state current (A)	外形尺寸 overall dimension(mm)						质量 mass (kg)	起重能力 lifting capacity(kg) (冷态/热态 cold/hot state)	
			A	B	C	F	E	G		铸铁锭 casting ingot	切屑 turnings
MW61-400240L/1-75	40.01	181.9	4000	2400	1600	350	200	65	15600	7000/6000	3500/3000
MW61-380160L/1-75	30.36	138	3800	1600	2380	410	260	90	9700	6000/5000	3000/2500
MW61-350220L/1-75	42.5	193	3500	2200	1955	400	300	90	12000	6000/5000	3000/2500
MW61-300210L/1-75	34.5	157.1	3000	2100	1810	400	250	80	10500	5000/4000	2500/2000
MW61-300150L/1-75	28	127.3	3000	1500	1550	390	210	70	7660	3500/2800	1800/1500
MW61-250200L/1-75	24.6	136.5	2500	2000	2000	390	280	90	8400	5000/4200	2300/1800
MW61-250160L/1-75	29.2	133	2500	1600	1700	310	210	60	7500	4800/3900	2400/1950
MW61-250150L/1-75	24.2	110	2500	1500	1700	300	210	60	5936	4000/3200	2000/1600
MW61-240120L/1-75	24.57	112	2400	1200	1680	250	180	60	3970	3000/2400	1500/1200
MW61-200150L/1-75	17.93	81.5	2000	1500	1300	250	180	70	4200	2200/1900	1000/800
MW61-300150L/1	32.3	146.7	3000	1500	1530	390	210	70	6086	3500/2800	1800/1500
MW61-300100L/1	23.5	107	3000	1000	1530	350	210	60	5800	3000/2400	1500/1200

废钢类起重电磁铁
Lifting Electromagnet For Steel Scraps

MW61-240100L/1	19.9	90.5	2400	1000	1800	250	180	60	3600	2500/1700	1300/900
MW61-220120L/1	23.4	106.3	2200	1200	1695	250	180	60	3650	2800/2240	1400/1120
MW61-200150L/1	21.01	95.5	2000	1500	1560	250	180	60	4000	2500/2000	1300/1000
MW61-20012 0L/1	15.68	73.26	2000	1200	1560	210	150	60	3650	2100/1000	1050/950
MW61-200100L/1	17.13	77.87	2000	1000	1450	300	190	60	2700	2000/1800	1000/900
MW61-140100L/1	12	55	1400	1000	1120	220	140	50	2350	1400/1100	700/600
MW61-11070L/1	7.7	35.1	1120	720	1020	220	150	45	1150	1000/800	600/540

MW61强磁型 Series MW 61 Strong Magnetic Type

主要技术参数 (额定电压DC-220V) Main technical data (rated voltage DC-220)

型号 Model	冷态功率 Cold-state Power (kw)	冷态电流 cold-state current (A)	外形尺寸 overall dimension(mm)						质量 mass (kg)	起重能力 lifting capacity(kg) (冷态/热态 cold/hot state)	
			A	B	C	F	E	G		铸铁锭 casting ingot	切屑 turnings
MW61-23090L/1-75-QC	18.5	84.3	2300	900	1800	250	180	60	3650	2500/1700	1300/900
MW61-220150L/1-75-QC	20.8	94.5	2240	1540	1780	360	220	70	5600	3000/2400	1500/1200

注：准确的说，由于废钢铁种类很多（在《GB 4223-2004废钢铁》中，就分为诸于重型废钢、中型废钢、小型废钢、统料型废钢、轻料型废钢等多种），其形状、大小、重量、堆密度均不一样，故电磁铁磁路设计上应有差异。苦电磁铁吸料是以某一种废钢为主，我公司可为您定制，充分发挥其最大效力。

Note:Exactly speaking,there are various kinds of steel scraps (In "Steel Scrap GB 4223-2004",they are divided into heavy type,medium type,small type,aggregate type,light type,etc.).As the figure,size,weight and bulk density are different,the magnetic circuit of the electromagnet should be designed separatly.However we can produce the most suitable one for you if you let us know the main content in the scraps to ensure the best performance.

方坯、梁坯、板坯吊运用电磁铁

Lifting Electromagnet for Billet,Girder Billet and Slab

MW22系列 Series MW22

本系列为应用最广泛的长方形电磁铁，主要适用于吊运方坯、钢锭和大型初轧坯等，也可用于吊运圆坯、型钢等。针对不同类型的钢材，采用不同的磁路设计。

The most widely used series whose shape is rectangle especially suitable for lifting and transporting billet,steel ingot,bloom,etc.,and round,profiled steel as well.Different magnetic circuits are designed for different steels.

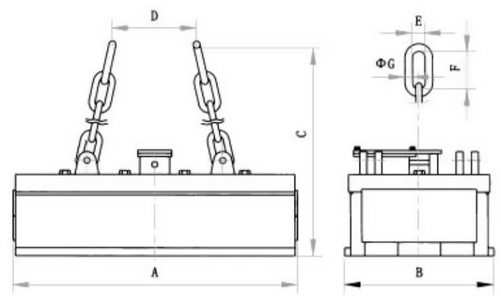

外形尺寸图
Overall Dimension Drawing

MW22常温型 Series MW 22 Normal Temperature Type

主要技术参数 (额定电压DC-220V，通电持续率TD-60%)
Main technical data (rated voltage DC-220,duty cycle TD-60%)

型号 Model	冷态功率 Cold-state Power (kw)	冷态电流 cold-state current (A)	外形尺寸(mm overall dimension							质量 mass (kg)	起重能力举例（两台联用） lifting capacity of 2 units (An Example)			
											150方坯 Billet		200方坯 Billet	
			A	B	C	D	E	F	G		长度 length (m)	根数 piece (s)	长度 length (m)	根数 piece (s)
MW22-9065L/1	4.85	22.0	900	650	1050	500	110	180	35	1420	11	5	9	4
MW22-11065L/1	5.6	25.5	1100		1050	500	110	180	40	1720		6		5
MW22-14065L/1	6.9	31.3	1400		1100	600	125	200	45	2150		8		6
MW22-17065L/1	8.1	36.5	1700		1200	600	125	200	50	2650		10		7
MW22-21065L/1	10.1	45.7	2100		1250	700	140	250	55	3110		12		9
MW22-11070L/1	5.6	25.5	1100	700	1050	500	110	180	40	1860	12	6	10	5
MW22-14070L/1	6.9	31.3	1400		1100	600	125	200	45	2330		8		6
MW22-17070L/1	8.9	40.3	1700		1200	600	125	200	50	2820		10		7
MW22-21070L/1	10.2	45.8	2100		1250	700	140	250	55	3290		12		9
MW22-11080L/1	5.9	26.8	1100	800	1100	600	140	250	45	2160	14	6	11	5
MW22-14080L/1	7.4	33.4	1400		1200	600	125	200	50	2700		8		6
MW22-17080L/1	9.03	41	1700		1250	600	140	250	55	3210		10		7
MW22-21080L/1	10.2	45.8	2100		1350	700	140	250	60	3840		12		9

方坯、梁坯、板坯吊运用电磁铁
Lifting Electromagnet for Billet,Girder Billet and Slab

MW22-14090L/1	7.3	33	1400	900	1250	600	140	250	55	3010	16	8	12.5	6
MW22-17090L/1	8.9	40.5	1700		1350	600	140	250	60	3560		10		7
MW22-21090L/1	10.0	45.5	2100		1350	700	160	250	65	4280		12		9
MW22-25090L/1	12.0	54.4	2500		1350	600	160	250	70	5130		15		11
MW22-140100L/1	7.4	33.5	1400	1000	1350	600	140	250	60	3430	17.5	8	14	6
MW22-170100L/1	8.9	40.1	1700		1350	700	160	250	65	3930		10		7
MW22-210100L/1	11.1	50.3	2100		1350	700	160	250	70	4910		12		9
MW22-250100L/1	13.1	59.2	2500		1400	700	160	250	75	5860		15		11

MW22高温型 Series MW 22 High Temperature Type

主要技术参数 (额定电压DC-220V，通电持续率TD-60%)
Main technical data (rated voltage DC-220v,duty cycle TD-60%)

型号 Model	冷态功率 Cold-state Power (kw)	冷态电流 cold-state current (A)	外形尺寸(mm) overall dimension							质量 mass (kg)	起重能力举例（两台联用） lifting capacity of 2 units (An Example)			
											150方坯 Billet		200方坯 Billet	
			A	B	C	D	E	F	G		长度 length (m)	根数 piece (s)	长度 length (m)	根数 piece (s)
MW22-9065L/2	4.7	22.0	900	650	1050	500	110	180	35	1380	11	5	9	4
MW22-11065L/2	5.5	25.0	1100		1050	500	110	180	40	1680		6		5
MW22-14065L/2	7.1	32.3	1400		1100	600	125	200	45	2200		8		6
MW22-17065L/2	8.8	36.4	1700		1200	600	125	200	50	2710		10		7
MW22-21065L/2	11	50.0	2100		1250	700	140	250	55	3180		12		9
MW22-11070L/2	5.7	26.0	1100	700	1050	500	110	180	40	1820	12	6	10	5
MW22-14070L/2	7.1	32.3	1400		1100	600	125	200	45	2380		8		6
MW22-17070L/2	9.1	41.4	1700		1200	600	125	200	50	2900		10		7
MW22-21070L/2	11.2	50.9	2100		1250	700	140	250	55	3380		12		9
MW22-11080L/2	6.0	27.3	1100	800	1100	600	140	250	45	2190	14	6	11	5
MW22-14080L/2	7.5	34.1	1400		1200	600	125	200	50	2760		8		6
MW22-17080L/2	8.8	40	1700		1250	600	140	250	55	3150		10		7
MW22-21080L/2	10.5	47.7	2100		1350	700	140	250	60	3890		12		9
MW22-14090L/2	7.6	33.6	1400	900	1250	600	140	250	55	3060	16	8	12.5	6
MW22-17090L/2	9.6	43.5	1700		1350	600	140	250	60	3630		10		7
MW22-21090L/2	11.2	50.9	2100		1350	700	160	250	65	4360		12		9
MW22-25090L/2	12.2	55.5	2500		1350	600	160	250	70	5220		15		11
MW22-140100L/2	7.4	33.6	1400	1000	1350	600	140	250	60	3510	17.5	8	14	6
MW22-170100L/2	9.5	43.2	1700		1350	700	160	250	65	4120		10		7
MW22-210100L/2	11.3	51.4	2100		1350	700	160	250	70	5010		12		9
MW22-250100L/2	12.3	55.9	2500		1400	700	160	250	75	5970		15		11

方坯、梁坯、板坯吊运用电磁铁

Lifting Electromagnet for Billet,Girder Billet and Slab

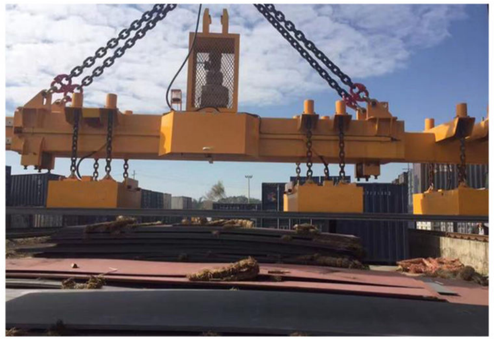

MW22超高温型 Series MW 22 Super high Temperature Type

主要技术参数 (额定电压DC-220V，通电持续率TD-60%)
Main technical data (rated voltage DC-220v,duty cycle TD-60%)

型号 Model	冷态功率 Cold-state Power (kw)	冷态电流 cold-state current (A)	外形尺寸(mm) overall dimension							质量 mass (kg)	起重能力举例（两台联用） Example for lifting capacity (combination of two units)			
											150方坯 Billet		200方坯 Billet	
			A	B	C	D	E	F	G		长度 length (m)	根数 piece (s)	长度 length (m)	根数 piece (s)
MW22-9065L/3	5.3	24.1	900	650	1100	500	110	180	35	1520	9	5	7.5	4
MW22-11065L/3	6.2	28.2	1100		1100	500	110	180	40	1840		6		5
MW22-14065L/3	7.7	35.0	1400		1150	600	125	200	45	2290		8		6
MW22-17065L/3	9.5	43.2	1700		1250	600	125	200	50	2840		10		7
MW22-21065L/3	11.9	54.1	2100		1300	700	140	250	55	3330		12		9
MW22-11070L/3	6.1	27.7	1100	700	1100	500	110	180	40	2000	9.5	6	8.0	5
MW22-14070L/3	7.6	34.5	1400		1150	600	125	200	45	2500		8		6
MW22-17070L/3	9.7	44.1	1700		1250	600	125	200	50	3020		10		7
MW22-21070L/3	11.8	53.6	2100		1300	700	140	250	55	3290		12		9
MW22-11080L/3	6.5	29.5	1100	800	1150	600	140	250	45	2320	11.5	6	9.0	5
MW22-14080L/3	8.05	36.6	1400		1250	600	125	200	50	2890		8		6
MW22-17080L/3	9.6	43.6	1700		1300	600	140	250	55	3450		10		7
MW22-21080L/3	11.8	53.6	2100		1400	700	140	250	60	4150		12		9
MW22-14090L/3	8.0	36.4	1400	900	1300	600	140	250	55	3010	13.0	8	10.0	6
MW22-17090L/3	9.9	45.0	1700		1400	600	140	250	60	3800		10		7
MW22-21090L/3	11.7	53.2	2100		1400	700	160	250	65	4580		12		9
MW22-25090L/3	14.1	64.1	2500		1400	600	160	250	70	5490		15		11
MW22-140100L/3	8.2	37.3	1400	1000	1400	600	140	250	60	3670	14.0	8	11.5	6
MW22-170100L/3	9.9	45.0	1700		1400	700	160	250	65	4210		10		7
MW22-210100L/3	12.4	56.4	2100		1400	700	160	250	70	5250		12		9
MW22-250100L/3	15.1	68.6	2500		1450	700	160	250	75	6270		15		11

方坯、梁坯、板坯吊运用电磁铁
Lifting Electromagnet for Billet,Girder Billet and Slab

MW32系列 Series MW32

本系列为应用最广泛的长方形电磁铁，主要适用于吊运方坯、钢锭和大型初轧坯等，也可用于吊运圆坯、型钢等。针对不同类型的钢材，采用不同的磁路设计。具有透磁深的特点。

This series are most widely used rectangular electromagnets,suitable for lifting and transporting square billet,steel ingot,large blooming and so on.and also used for lifting and transporting round,profiled bar and so on.Different magnetic circuits are adopted for different type of steels,with the property of farther permeability depth.

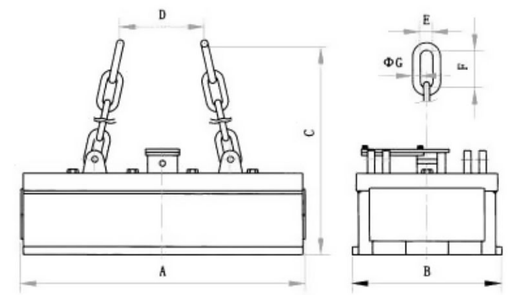

外形尺寸图
Overall Dimension Drawing

MW32常温型 Series MW 32 Normal Temperature Type

主要技术参数 (额定电压DC-220V，通电持续率TD-60%)
Main technical data (rated voltage DC-220v,duty cycle TD-60%)

型号 Model	冷态功率 Cold-state Power (kw)	冷态电流 cold-state current (A)	外形尺寸(mm) overall dimension							质量 mass (kg)	起重能力举例（两台联用） Example for lifting capacity (combination of two units)			
											150方坯 Billet		200方坯 Billet	
			A	B	C	D	E	F	G		长度 length (m)	根数 piece (s)	长度 length (m)	根数 piece (s)
MW32-90110L/1	6.4	29	900	1100	1000	500	110	180	40	1670	15	5	12	4
MW32-110110L/1	7.9	35.8	1100		1000	500	125	200	45	2030		6		5
MW32-140110L/1	9.8	44.5	1400		1050	500	125	200	50	2510		8		6
MW32-110120L/1	8.2	37.3	1100	1200	1050	500	125	200	50	2470	18.5	6	15	5
MW32-140120L/1	9.6	43.5	1400		1100	600	140	250	55	3080		8		6
MW32-170120L/1	12.4	56	1700		1150	700	140	250	60	3600		10		7
MW32-140130L/1	10.2	46.4	1400	1300	1150	600	140	250	60	3650	22	8	17.5	6
MW32-170130L/1	12.2	55.1	1700		1200	700	160	250	65	4280		10		7
MW32-210130L/1	15.1	68.4	2100		1250	700	160	250	70	5350		12		9

方坯、梁坯、板坯吊运用电磁铁
Lifting Electromagnet for Billet,Girder Billet and Slab

MW32高温型 Series MW 32 High Temperature Type

主要技术参数 (额定电压DC-220V，通电持续率TD-60%)
Main technical data (rated voltage DC-220v,duty cycle TD-60%)

型号 Model	冷态功率 Cold-state Power (kw)	冷态电流 cold-state current (A)	外形尺寸(mm) overall dimension							质量 mass (kg)	起重能力举例（两台联用） lifting capacity of 2 units (An Example)			
											150方坯 Billet		200方坯 Billet	
			A	B	C	D	E	F	G		长度 length (m)	根数 piece (s)	长度 length (m)	根数 piece (s)
MW32-90110L/2	6.5	29.5	900	1100	1000	500	110	180	40	1710	15	5	12	4
MW32-110110L/2	8.2	37.3	1100		1000	500	125	200	45	2080		6		5
MW32-140110L/2	10.1	45.9	1400		1050	500	125	200	50	2570		8		6
MW32-110120L/2	8.5	38.6	1100	1200	1050	500	125	200	50	2530	18.5	6	15	5
MW32-140120L/2	10.1	45.9	1400		1100	600	140	250	55	3150		8		6
MW32-170120L/2	12.5	56.8	1700		1150	700	140	250	60	3680		10		7
MW32-140130L/2	10.9	49.5	1400	1300	1150	600	140	250	60	3720	22	8	17.5	6
MW32-170130L/2	12.4	56.4	1700		1200	700	160	250	65	4360		10		7
MW32-210130L/2	15.9	72.3	2100		1250	700	160	250	70	5460		12		9

MW32超高温型 Series MW 32 Over-High Temperature Type

主要技术参数 (额定电压DC-220V，通电持续率TD-60%)
Main technical data (rated voltage DC-220v,duty cycle TD-60%)

型号 Model	冷态功率 Cold-state Power (kw)	冷态电流 cold-state current (A)	外形尺寸(mm) overall dimension							质量 mass (kg)	起重能力举例（两台联用） lifting capacity of 2 units (An Example)			
											150方坯 Billet		200方坯 Billet	
			A	B	C	D	E	F	G		长度 length (m)	根数 piece (s)	长度 length (m)	根数 piece (s)
MW32-90110L/3	7.0	31.8	900	1100	1050	500	110	180	40	1790	13	5	10.5	4
MW32-110110L/3	8.7	39.5	1100		1050	500	125	200	45	2170		6		5
MW32-140110L/3	10.8	49.1	1400		1100	500	125	200	50	2700		8		6
MW32-110120L/3	9.1	41.4	1100	1200	1100	500	125	200	50	2660	15.5	6	13	5
MW32-140120L/3	10.6	48.2	1400		1150	600	140	250	55	3320		8		6
MW32-170120L/3	13.6	61.8	1700		1200	700	140	250	60	3870		10		7
MW32-140130L/3	11.3	51.4	1400	1300	1200	600	140	250	60	3930	18	8	15	6
MW32-170130L/3	13.5	61.4	1700		1250	700	160	250	65	4610		10		7
MW32-210130L/3	16.0	72.7	2100		1300	700	160	250	70	5760		12		9

方坯、梁坯、板坯吊运用电磁铁
Lifting Electromagnet for Billet,Girder Billet and Slab

MW42系列 Series MW42

采用“┌┬┬┐”型磁路结构，能在狭小的吸附面积内产生强大的吸力，适用于吊运多根小方坯、轨梁，也可用于吊运圆坯、型钢等，是一种高吸力型起重电磁铁。

This super force series which adopts"┌┬┬┐" structure and can generate powerful attraction force in attached area is suitable for lifting and transporting billets girder beam and track beam,and also used for lifting and transporting round,profiled steel.

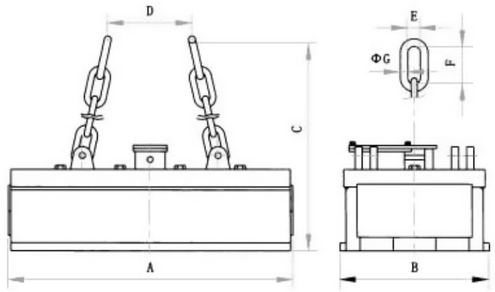

外形尺寸图
Overall Dimension Drawing

MW42常温型 Series MW 42 Normal Temperature Type

主要技术参数 (额定电压DC-220V，通电持续率TD-60%)
Main technical data (rated voltage DC-220v,duty cycle TD-60%)

型号 Model	冷态功率 Cold-state Power (kw)	冷态电流 cold-state current (A)	外形尺寸(mm) overall dimension							质量 mass (kg)	起重能力举例（两台联用） lifting capacity of 2 units (An Example)			
											200方坯 Billet		240方坯 Billet	
			A	B	C	D	E	F	G		长度 length (m)	根数 piece (s)	长度 length (m)	根数 piece (s)
MW42-90115L/1	8.83	40.1	900	1150	1050	500	110	180	40	1880	11	4	9.5	3
MW42-110115L/1	10.5	47.5	1100		1050	500	125	200	45	2180		5		4
MW42-140115L/1	13.1	59.5	1400		1100	500	125	200	50	2760		6		5
MW42-110130L/1	10.3	46.7	1100	1300	1050	500	125	200	50	2700	13.5	5	12	4
MW42-140130L/1	13.0	59.0	1400		1100	600	140	250	55	3340		6		5
MW42-170130L/1	16.6	75.4	1700		1200	600	140	250	60	3920		7		6
MW42-140140L/1	13.9	63	1400	1400	1100	600	140	250	60	3980	16.5	6	14.5	5
MW42-170140L/1	16.5	74.5	1700		1200	600	160	250	65	4610		7		6
MW42-210140L/1	19.8	89.8	2100		1350	700	160	250	70	5710		9		8

方坯、梁坯、板坯吊运用电磁铁
Lifting Electromagnet for Billet,Girder Billet and Slab

MW42高温型 Series MW 42 High Temperature Type

主要技术参数 (额定电压DC-220V，通电持续率TD-60%)
Main technical data (rated voltage DC-220v,duty cycle TD-60%)

型号 Model	冷态功率 Cold-state Power (kw)	冷态电流 cold-state current (A)	外形尺寸(mm) overall dimension							质量 mass (kg)	起重能力举例（两台联用） lifting capacity of 2 units (An Example)			
											200方坯 Billet		240方坯 Billet	
			A	B	C	D	E	F	G		长度 length (m)	根数 piece (s)	长度 length (m)	根数 piece (s)
MW42-90110L/2	8.95	40.7	900	1100	1050	500	110	180	40	1920	11	4	9.5	3
MW42-110110L/2	11.2	50.9	1100		1050	500	125	200	45	2230		5		4
MW42-140110L/2	13.5	61.4	1400		1100	600	125	200	50	2820		6		5
MW42-110130L/2	11.1	50.5	1100	1300	1050	500	125	200	50	2760	13.5	5	12	4
MW42-140130L/2	13.4	60.9	1400		1100	600	140	250	55	3410		6		5
MW42-170130L/2	17.1	77.7	1700		1200	600	140	250	60	4000		7		6
MW42-140140L/2	13.8	62.7	1400	1400	1100	600	140	250	60	4060	16.5	6	14.5	5
MW42-170140L/2	17.0	77.2	1700		1200	600	160	250	65	4700		7		6
MW42-210140L/2	21.0	95.5	2100		1350	700	160	250	70	5810		9		8

MW42超高温型 Series MW 42 Over-High Temperature Type

主要技术参数 (额定电压DC-220V，通电持续率TD-60%)
Main technical data (rated voltage DC-220v,duty cycle TD-60%)

型号 Model	冷态功率 Cold-state Power (kw)	冷态电流 cold-state current (A)	外形尺寸(mm) overall dimension							质量 mass (kg)	起重能力举例（两台联用） lifting capacity of 2 units (An Example)			
											200方坯 Billet		240方坯 Billet	
			A	B	C	D	E	F	G		长度 length (m)	根数 piece (s)	长度 length (m)	根数 piece (s)
MW42-90110L/3	9.7	44.1	900	1100	1100	500	110	180	40	2010	9.5	4	8.0	3
MW42-110110L/3	11.9	54.1	1100		1100	500	125	200	45	2430		5		4
MW42-140110L/3	14.2	64.5	1400		1150	600	125	200	50	2950		6		5
MW42-110130L/3	11.8	53.6	1100	1300	1100	500	125	200	50	2890	11.5	5	10.0	4
MW42-140130L/3	14.0	63.6	1400		1150	600	140	250	55	3580		6		5
MW42-170130L/3	18.2	82.7	1700		1250	600	140	250	60	4190		7		6
MW42-140140L/3	15.1	68.6	1400	1400	1150	600	140	250	60	4260	14.0	6	12.0	5
MW42-170140L/3	18.0	81.8	1700		1250	600	160	250	65	4950		7		6
MW42-210140L/3	22.2	100.9	2100		1400	700	160	250	70	6120		9		8

注：超高温型电磁铁可提供水冷型，即吊运数次热坯后，电磁铁吸力会明显下降，此时将电磁铁吊入冷水池中冷却数十秒，再进行吊运，称之为高温潜水型电磁铁。采取独特的制造工艺，巧妙的散热结构，保证焊缝不开裂，线圈不进水。

Note:Over-high temperature type can be supplied with cooling equipment,that is:after several times of lifting hot billet,the attraction force would reduce obviously,then you should place the electromagnet into cold water pool for some seconds,after that put it into operation again,We call it as high temperature diving electromagnet.Owing to some special process technics and smart heat dispersion structure, welding will never get split and the coil will always be waterproof.

方坯、梁坯、板坯吊运用电磁铁
Lifting Electromagnet for Billet,Girder Billet and Slab

MW92系列 Series MW92

电磁铁的磁极内装有可活动磁极坏，在与被吸物接触后能自由伸缩，可得到最大的接触面积。由于活动磁极维护量大，容易出现卡死，因此一般不推荐此种系列。

The movable pole block,which has been mounted inside electromagnet,is retractable when contact with material in order to get the maximum contact area,However,owing to a big demand for maintenance and repair for this series,because stuck fault appears frequenctly,so we don't recommend this series to be used.

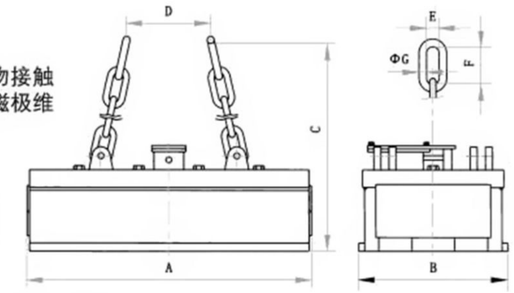

外形尺寸图
Overall Dimension Drawing

MW92常温型 Series MW 92 Normal Temperature Type

主要技术参数 (额定电压DC-220V，通电持续率TD-60%)
Main technical data (rated voltage DC-220v,duty cycle TD-60%)

型号 Model	冷态功率 Cold-state Power (kw)	冷态电流 cold-state current (A)	外形尺寸(mm) overall dimension							质量 mass (kg)	起重能力举例（两台联用） lifting capacity of 2 units (An Example)			
											150方坯 Billet		200方坯 Billet	
			A	B	C	D	E	F	G		长度 length (m)	根数 piece (s)	长度 length (m)	根数 piece (s)
MW92-10060L/1	4.6	20.9	1000	600	1180	1200	125	200	38	970	6	5	4.5	4
MW92-14060L/1	7.1	32.3	1400	600	1200	1610	125	200	38	1240	6	8	4.5	6
MW92-16065L/1	8	36.4	1600	650	1100	1800	125	200	45	1740	7.5	10	5.5	7
MW92-19065L/1	10	45.5	1900	250	1246	2100	175	250	50	1990	7.5	12	5.5	9
MW92-21070L/1	10	45.5	2100	700	1300	2300	175	250	50	2800	9	13	6.5	10

MW92高温型 Series MW 92 High Temperature Type

主要技术参数 (额定电压DC-220V，通电持续率TD-60%)
Main technical data (rated voltage DC-220v,duty cycle TD-60%)

型号 Model	冷态功率 Cold-state Power (kw)	冷态电流 cold-state current (A)	外形尺寸(mm) overall dimension							质量 mass (kg)	起重能力举例（两台联用） lifting capacity of 2 units (An Example)			
											150方坯 Billet		200方坯 Billet	
			A	B	C	D	E	F	G		长度 length (m)	根数 piece (s)	长度 length (m)	根数 piece (s)
MW92-10060L/2	3.3	15	1000	600	1180	1200	125	200	38	970	6	5	4.5	4
MW92-14060L/2	5.5	25	1400	650	1025	1610	125	200	38	1300	6	8	4.5	6
MW92-16065L/2	5.65	25.7	1800	900	741	1860	175	250	50	1800	7.5	10	5.5	7
MW92-19065L/2	8	36.4	1900	650	1300	2100	175	250	50	2100	7.5	12	5.5	9
MW92-21070L/2	8	36.4	2100	700	1400	2300	175	250	50	3000	9	13	6.5	10

高速线材（盘圆）专用型起重电磁铁
Lifting Electromagnet for High Speed Wier (Coiled Bar)

MW19系列 Series MW19

本系列专用于吊运盘圆，由于其自重轻、合理的结构（与盘圆只两点接触），已替代原MW22-□54系列，吊盘圆原则上不推荐用户使用MW22-□54系列，但本样本仍列出其相关技术参数表，供用户参考。其磁极结构能适应不同直径的盘圆，电磁铁的选择取决于盘圆的长度，既可沿电磁铁长度方向吊运多捆盘圆，亦可沿宽度方向吊运多捆，可提供多台并用方式，并能单独通、断，方便装车作业。

This series,owing to light self-weight,reasonable structure (just contact with two points of the bar)is suitable for coiled bar,and has replaced former series MW22-□54,which are not recommend by us now. However we still list main data for these two series for your reference.Its magnetic pole is suitable for coiled bar which is of different diamneter.The length of coiled bar is important in choosing the right electromagnet.It can be put into operation along length or width direction of electromagnet and multiple units can be used together or separately as well.

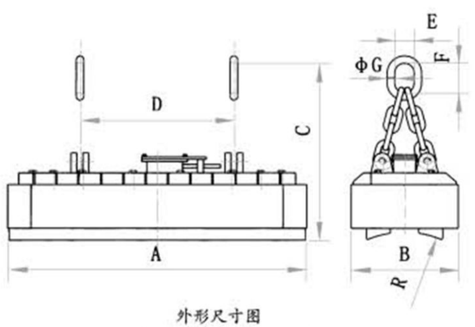

外形尺寸图
Overall Dimension Drawing

MW19常温型 Series MW19 Normal Temperature Type

主要技术参数 (额定电压DC-220V，通电持续率TD-60%)
Main technical data（rated voltage DC-220v,duty cycle TD-60%）

型号 Model	冷态功率 Cold-state Power (kw)	冷态电流 cold-state current (A)	外形尺寸(mm) overall dimension A	B	C	D	E	F	G	质量 mass (kg)	起吊能力 lifting capacity
MW19-14072L/1	8.6	39.1	1400	720	1180	1100	130	200	30	1760	盘圆外径 outer diameter of coiled bar: Φ1250-Φ1350mm 盘圆重量 weight of coiled bar: 900-1200kg/m 吊运盘圆时长度与电磁铁长度配套 The length of coiled bar to be lifted shall be matched with that of electromagnet
MW19-21072L/1	12.5	56.8	2100			1600			30	2670	
MW19-27072L/1	15.6	70.9	2700			2000			40	3250	
MW19-30072L/1	17.5	79.5	3000			2000			40	3640	
MW19-34072L/1	20.3	92.3	3400			2500			40	4100	
MW19-42072L/1	24.7	112.3	4200			3000			50	5200	
MW19-54072L/1	31.2	141.8	5400			3500			50	6430	
MW19-56072L/1	33	150	5600			4000			50	6720	
MW19-60072L/1	35	159.1	6000			4000			50	7200	
MW19-63072L/1	36.8	167.3	6300			4000			50	7800	
MW19-70072L/1	41.2	187.3	7000			4000			50	8400	

高速线材（盘圆）专用型起重电磁铁
Lifting Electromagnet for High Speed Wier (Coiled Bar)

MW19高温型 Series MW 19 High Temperature Type

主要技术参数 (额定电压DC-220V，通电持续率TD-60%)
Main technical data（rated voltage DC-220v,duty cycle TD-60%）

型号 Model	冷态功率 Cold-state Power (kw)	冷态电流 cold-state current (A)	外形尺寸(mm) overall dimension A	B	C	D	E	F	G	质量 mass (kg)	起吊能力 lifting capacity
MW19-14072L/2	7.8	35.5	1400	720	1230	1100	130	200	30	1830	盘圆外径 outer diameter of coiled bar: Φ1250-Φ1350mm 盘圆重量 weight of coiled bar: 900-1200kg/m 吊运盘圆时长度与电磁铁长度配套 The length of coiled bar to be lifted shall be matched with that of electromagnet
MW19-21072L/2	11.8	53.6	2100			1600			30	2760	
MW19-27072L/2	14.9	67.7	2700			2000			40	3410	
MW19-30072L/2	16.5	79.5	3000			2000			40	3790	
MW19-34072L/2	19.1	75	3400			2500			40	4290	
MW19-42072L/2	23.6	107.3	4200			3000			50	5350	
MW19-54072L/2	29.7	135	5400			3500			50	6750	
MW19-56072L/2	30.9	140.5	5600			4000			50	7030	
MW19-60072L/2	33	150	6000			4000			50	7520	
MW19-63072L/2	35.6	161.8	6300			4000			50	8020	
MW19-70072L/2	39.3	178.6	7000			4000			50	8650	

MW22-□54系列 Series MW22-□54

主要技术参数Main technical data

型号 Model	冷态功率 Cold-state Power (kw)	冷态电流 cold-state current (A)	外形尺寸(mm) overall dimension A	B	C	D	E	F	G	质量 mass (kg)	起吊能力 lifting capacity
MW22-10054L/1	6.6	30	1000	540	1250	500	130	200	30	1520	盘圆外径 outer diameter of coiled bar: Φ1250-Φ1350mm 盘圆重量 weight of coiled bar: 900-1200kg/m 吊运盘圆时长度与电磁铁长度配套 The length of coiled bar to be lifted shall be matched with that of electromagnet
MW22-16054L/1	10	45.5	1600		1210	600			30	2350	
MW22-20054L/1	12.8	58.2	2000		1200	700			30	2480	
MW22-26054L/1	15	68.2	2600		1220	800			40	3210	
MW22-30054L/1	17.6	80	3000		1230	1000			40	3800	
MW22-34054L/1	19	86.4	3400		1230	1200			40	4250	
MW22-36054L/1	19.7	89.5	3600		1250	1300			40	4450	
MW22-40054L/1	21.9	99.5	4000		1250	1550			50	5000	
MW22-46054L/1	26.4	120	4600		1250	1800			50	5650	

捆扎螺纹钢、型钢专用起重电磁铁
Lifting Electromagnet for Bundled Rebar and Profiled Steel

MW18系列 Series MW18

MW18系列电磁铁运用独特的“┌┐”型磁路，双线包结构，具有散热好、透磁深，能穿透多层气隙的特点，可吊运没作捆轧或只作了简单捆轧的棒材、扁铁、角钢等。有常温型和高温型。由于多采用两台或多台联吊，故其与挂梁联接多采用两吊点或四吊点结构，本样本中所列均为两吊点结构，订货时请注明与挂梁联接的具体要求。由于圆钢、螺纹钢等这类型材的挠度较大，建议被吸物长度超过9米的采用多台联吊。

This series which adopts"┌┐"type of magnetic circuit and double wrapping has good advantages in heat dispersion,penetration,(for example it can penetrate air gap through multiple layers)and can lift and transport bar material,flat iron and angle iron in unpacked or simple packed situation.There are two kinds:normal & high temperature type.Normally multiple units are used in operation,so two or four connection points are used for linking hanging beam. We made an example of two connection-points linking way in this catalog, Please let us know your specific requirement before you place any order.Since the profiled steel like round iron and thread iron is of big deflection,when its length over 9 meters,we suggested you to use multiple units.

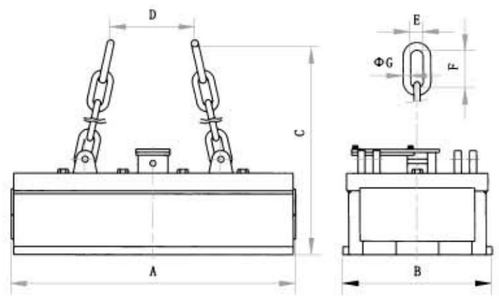

外形尺寸图
Overall Dimension Drawing

MW18常温型 Series MW18 Normal Temperature Type

主要技术参数 (额定电压DC-220V，通电持续率TD-60%)
Main technical data (rated voltage DC-220,duty cycle TD-60%)

型号 Model	冷态功率 Cold-state Power (kw)	冷态电流 cold-state current (A)	外形尺寸(mm) overall dimension							质量 mass (kg)	吊运捆扎棒材能力 capacity of lifting bundled bar		
			A	B	C	D	E	F	G		被吸物规格 specification of attached material	台数 Units	捆数 bundles
MW18-8070L/1	5.65	25.6	800	700	1000	500	110	180	30	920	捆扎长度12m 捆径≤Φ250mm 捆重≤2t bundles length=12m; diameter≤Φ250mm; weight≤2t	4	3
MW18-11070L/1	8	36.5	1100		1000	500			30	1270			4
MW18-14070L/1	10	45.6	1400		1100	600			35	1680			5
MW18-17070L/1	12.3	56	1700		1100	700			40	2100			6
MW18-11080L/1	8.35	38	1100	800	1100	500			35	1560	捆扎长度12m 捆径≤Φ300mm 捆重≤3t bundles length=12m; diameter≤Φ300mm; weight≤3t		3
MW18-14080L/1	10.8	48.5	1400		1150	600			40	1990			4
MW18-17080L/1	13.1	59.5	1700		1150	700			45	2470			5

捆扎螺纹钢、型钢专用起重电磁铁
Lifting Electromagnet for Bundled Rebar and Profiled Steel

MW18高温型 Series MW 18 High Temperature Type

主要技术参数 (额定电压DC-220V，通电持续率TD-60%)
Main technical data (rated voltage DC-220v,duty cycle TD-60%)

型号 Model	冷态功率 Cold-state Power (kw)	冷态电流 cold-state current (A)	外形尺寸(mm) overall dimension							质量 mass (kg)	吊运捆扎棒材能力 capacity of lifting bundled bar		
			A	B	C	D	E	F	G		被吸物规格 specification of attached material	台数 Units	捆数 bundles
MW18-8070L/2	5.0	22.7	800	700	1050	500	110	180	30	990	捆扎长度12m 捆径≤Φ250mm 捆重≤2t bundles length=12m; diameter≤Φ250mm; weight≤2t	4	3
MW18-11070L/2	7.1	32.5	1100		1050	500			30	1380			4
MW18-14070L/2	8.8	40	1400		1150	600			35	1800			5
MW18-17070L/2	10.8	49	1700		1150	700			40	2250			6
MW18-11080L/2	7.4	33.5	1100	800	1150	500			35	1670	捆扎长度12m 捆径≤Φ300mm 捆重≤3t bundles length=12m; diameter≤Φ300mm; weight≤3t		3
MW18-14080L/2	9.0	41	1400		1200	600			40	2140			4
MW18-17080L/2	11.6	52.5	1700		1200	700			45	2650			5

捆扎螺纹钢、型钢专用起重电磁铁

Lifting Electromagnet for Bundled Rebar and Profiled Steel

MW38系列 Series MW38

MW38系列电磁铁运用独特的磁路结构，具有散热好、透磁深，能穿透多层气隙的特点，可吊运没作捆轧或只作了简单捆轧的棒材、扁铁、角钢等。可改善小圆钢、螺纹钢等这类型材吊运时挠度较大的问题。有常温型和高温型。由于多采用两台或多台联吊，故其与挂梁连接多采用两吊或四吊点结构，本样本中所列均为两吊点结构，订货时请注明与挂梁联接的具体要求。

This series which adopts unique magnetic circuit has good advantages in heat dispersion,penetration,(for example it can penetrate air gap through multiple layers) and can lift and transport bar material,flat iron and angle iron in unpacked or simple packed situation.It improves problem like big deflection when lift round steel and thread steel.There are two kinds:normal & high temperature type. Normally multiple units are used in operation,so two or four connection points are used for linking hanging beam.We made an example of two connection-points linking way in this catalog, Please let us know your specific requirement before you place any order.

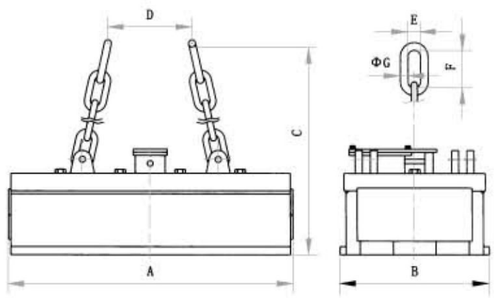

外形尺寸图
Overall Dimension Drawing

MW38常温型 Series MW38 Normal Temperature Type

主要技术参数 (额定电压DC-220V，通电持续率TD-60%)
Main technical data (rated voltage DC-220v,duty cycle TD-60%)

型号 Model	冷态功率 Cold-state Power (kw)	冷态电流 cold-state current (A)	外形尺寸(mm) overall dimension							质量 mass (kg)	吊运捆扎棒材能力 capacity of lifting bundled bar		
			A	B	C	D	E	F	G		被吸物规格 specification of attached material	台数 Units	捆数 bundles
MW38-10095L/1	7.9	35.9	1000	950	1050	500	110	180	30	1510	捆扎长度12m 捆径≤Φ400mm 捆重≤3.5t bundles length=12m; diameter≤Φ400mm; weight≤3.5t	4	2
MW38-14095L/1	10.9	49.5	1400		1100	600	110	180	35	2090			3
MW38-17095L/1	13.2	60	1700		1150	700	110	180	40	2530			4
MW38-110100L/1	8.9	40.5	1100	1000	1100	500	110	180	35	1920		3	2
MW38-140100L/1	10.5	47.7	1400		1150	600	110	180	40	2390	捆扎长度9m 捆径≤Φ400mm 捆重≤4t bundles length=9m; diameter≤Φ400mm; weight≤4t		3
MW38-170100L/1	13.4	60.9	1700		1150	700	125	200	45	2910			4
MW38-110110L/1	9.1	41.4	1100	1100	1150	600	110	180	40	2350		2	2
MW38-140110L/1	11.1	50.5	1400		1200	600	125	200	45	3020			3
MW38-170110L/1	13.5	61.4	1700		1250	700	125	200	50	3630			4

捆扎螺纹钢、型钢专用起重电磁铁
Lifting Electromagnet for Bundled Rebar and Profiled Steel

MW38高温型 Series MW 38 High Temperature Type

主要技术参数 (额定电压DC-220V，通电持续率TD-60%)
Main technical data (rated voltage DC-220v,duty cycle TD-60%)

型号 Model	冷态功率 Cold-state Power (kw)	冷态电流 cold-state current (A)	外形尺寸(mm) overall dimension							质量 mass (kg)	吊运捆扎棒材能力 capacity of lifting bundled bar		
			A	B	C	D	E	F	G		被吸物规格 specification of attached material	台数 Units	捆数 bundles
MW38-10095L/2	7.1	32.3	1000	950	1100	500	110	180	30	1630	捆扎长度12m 捆径≤Φ400mm 捆重≤3.5t bundles length=12m; diameter≤Φ400mm; weight≤3.5t	4	2
MW38-14095L/2	9.8	44.5	1400		1150	600	110	180	35	2240			3
MW38-17095L/2	11.7	53.2	1700		1200	700	110	180	40	2710			4
MW38-110100L/2	8.0	45.5	1100	1000	1150	500	110	180	35	2060		3	2
MW38-140110L/2	9.5	43.2	1400		1200	600	110	180	40	2580	捆扎长度9m 捆径≤Φ400mm 捆重≤4t bundles length=9m; diameter≤Φ400mm; weight≤4t		3
MW38-170110L/2	12.0	54.5	1700		1200	700	125	200	45	3150			4
MW38-110110L/2	8.2	37.3	1100	1100	1200	600	110	180	40	2530		2	2
MW38-140110L/2	10.1	45.9	1400		1250	600	125	200	45	3260			3
MW38-170110L/2	12.2	55.5	1700		1300	700	125	200	50	3910			4

吊运管坯、钢管用起重电磁铁
Lifting Electromagnet for Rebar and Steel Pipe

MW25系列 Series MW25

本系列为应用广泛的长方形电磁铁，主要适用于吊运圆坯、钢管等，也可用于吊运方坯、钢锭和大型初轧坯、型钢等。

The widely used leectromagnet which has rectangular shape is suitable for lifting and transporting round and steel pipe,etc.,and billet,steel ingot,bloom,profiled steel as well.

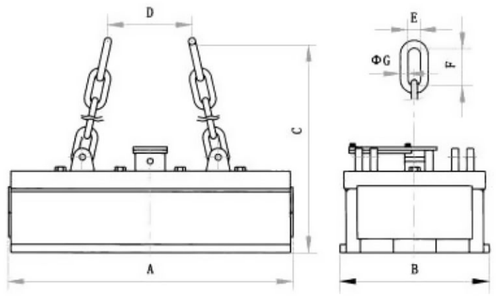

外形尺寸图
Overall Dimension Drawing

MW25常温型 Series MW25 Normal Temperature Type

主要技术参数 (额定电压DC-220V，通电持续率TD-60%)
Main technical data (rated voltage DC-220v,duty cycle TD-60%)

型号 Model	冷态功率 Cold-state Power (kw)	冷态电流 cold-state current (A)	外形尺寸(mm) overall dimension							质量 mass (kg)	两台联用起吊能力 lifting capacity of two units			
											圆坯round billet Φ180		钢管steel pipe Φ340×δ20	
			A	B	C	D	E	F	G		长度 length (m)	根数 piece (s)	长度 length (m)	根数 piece (s)
MW25-12080L/1	6.2	28.2	1100	800	1050	500	110	180	40	1520	9	6	13	3
MW25-14080L/1	7.7	35	1400		1100	600	125	200	45	1850		7		4
MW25-17080L/1	8.9	40.4	1700		1200	600	125	200	50	2330		9		5
MW25-26080L/1	14.4	65.4	2600		1300	700	140	250	60	3480		13		7
MW25-14085L/1	7.65	34.8	1400	850	1100	600	125	200	50	2210	10.5	7	14.5	4
MW25-17085L/1	9.95	45.2	1700		1200	600	140	250	55	2670		9		5
MW25-21085L/1	11.5	52.3	2100		1300	700	140	250	60	3290		10		6
MW25-14095L/1	8.2	37.2	1400	950	1150	600	140	250	55	2610	12	7	16	4
MW25-17095L/1	9.8	44.5	1700		1250	600	140	250	60	3130		9		5
MW25-21095L/1	11.4	51.7	2100		1350	700	160	250	65	3810		10		6
MW25-140100L/1	8.1	36.5	1400	1000	1200	600	140	250	60	3080	14	7	17	4
MW25-170100L/1	9.7	44.1	1700		1300	600	160	250	65	3710		9		5

吊运管坯、钢管用起重电磁铁
Lifting Electromagnet for Rebar and Steel Pipe

MW25高温型 Series MW 25 High Temperature Type

主要技术参数 (额定电压DC-220V，通电持续率TD-60%)
Main technical data (rated voltage DC-220v,duty cycle TD-60%)

型号 Model	冷态功率 Cold-state Power (kw)	冷态电流 cold-state current (A)	外形尺寸(mm) overall dimension							质量 mass (kg)	两台联用起吊能力 lifting capacity of two units			
											圆坯round billet Φ180		钢管steel pipe Φ340×δ20	
			A	B	C	D	E	F	G		长度 length (mm	根数 piece (s)	长度 length (m)	根数 piece (s)
MW25-12080L/2	6.5	29.5	1100	800	1050	500	110	180	40	1560	9	6	13	3
MW25-14080L/2	8.1	36.8	1400		1100	600	125	200	45	1890		7		4
MW25-17080L/2	9.2	41.8	1700		1200	600	125	200	50	2380		9		5
MW25-26080L/2	15.1	68.6	2600		1300	700	140	250	60	3550		13		7
MW25-14085L/2	8.15	37.0	1400	850	1100	600	125	200	50	2260	10.5	7	14.5	4
MW25-17085L/2	10.5	47.7	1700		1200	600	140	250	55	2730		9		5
MW25-21085L/2	12.1	55	2100		1300	700	140	250	60	3360		10		6
MW25-14095L/2	8.6	39.1	1400	950	1150	600	140	250	55	2670	12	7	16	4
MW25-17095L/2	10.4	47.3	1700		1250	600	140	250	60	3190		9		5
MW25-21095L/2	12.0	54.5	2100		1350	700	160	250	65	3890		10		6
MW25-140100L/2	8.5	38.6	1400	1000	1200	600	140	250	60	3150	14	7	17	4
MW25-170100L/2	10.3	46.8	1700		1300	600	160	250	65	3800		9		5

吊运管坯、钢管用起重电磁铁
Lifting Electromagnet for Rebar and Steel Pipe

MW25超高温型 Series MW 25 Over–High Temperature Type

主要技术参数 (额定电压DC–220V，通电持续率TD–60%)
Main technical data (rated voltage DC–220v,duty cycle TD–60%)

型号 Model	冷态功率 Cold–state Power (kw)	冷态电流 cold–state current (A)	外形尺寸(mm) overall dimension							质量 mass (kg)	两台联用起吊能力 lifting capacity of two units			
											圆坯round billet Φ180		钢管steel pipe Φ340×δ20	
			A	B	C	D	E	F	G		长度 length (m)	根数 piece (s)	长度 length (m)	根数 piece (s)
MW25–12080L/3	6.9	31.4	1100	800	1100	500	110	180	40	1630	7.5	6	11	3
MW25–14080L/3	8.5	38.6	1400		1150	600	125	200	45	1980		7		4
MW25–17080L/3	9.8	44.5	1700		1250	600	125	200	50	2480		9		5
MW25–26080L/3	15.8	71.8	2600		1350	700	140	250	60	3730		13		7
MW25–14085L/3	8.6	39.1	1400	850	1150	600	125	200	50	2360	9.0	7	12	4
MW25–17085L/3	11.0	50	1700		1250	600	140	250	55	2860		9		5
MW25–21085L/3	12.4	56.4	2100		1350	700	140	250	60	3520		10		6
MW25–14095L/3	9.1	41.4	1400	950	1200	600	140	250	55	2800	10	7	13.5	4
MW25–17095L/3	10.9	49.5	1700		1300	600	140	250	60	3350		9		5
MW25–21095L/3	12.5	56.8	2100		1400	700	160	250	65	4090		10		6
MW25–140100L/3	9.0	40.9	1400	1000	1250	600	140	250	60	3300	12	7	14.5	4
MW25–170100L/3	10.8	49.1	1700		1350	600	160	250	65	3980		9		5

吊运管坯、钢管用起重电磁铁
Lifting Electromagnet for Rebar and Steel Pipe

MW35系列 Series MW35

主要适用于吊运圆坯、钢管等，也可用于吊运方坯、钢锭和大型初轧坯、型钢等。特殊磁路设计，具有透磁深的特点。

The series whose magnetic circuit is designed specially and has deep penetration is mainly used for lifting and transporting round,steel pipe etc.,and billet,steel ingot,bloom,profiled steel as well.

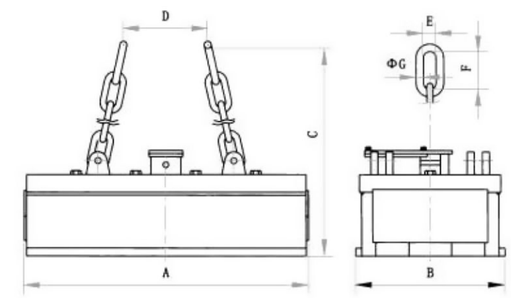

外形尺寸图
Overall Dimension Drawing

MW35常温型 Series MW35 Normal Temperature Type

主要技术参数 (额定电压DC–220V，通电持续率TD–60%)
Main technical data (rated voltage DC–220v,duty cycle TD–60%)

型号 Model	冷态功率 Cold–state Power (kw)	冷态电流 cold–state current (A)	外形尺寸(mm) overall dimension							质量 mass (kg)	两台联用起吊能力 lifting capacity of two units			
											圆坯round billet Φ350		钢管steel pipe Φ426×δ20	
			A	B	C	D	E	F	G		长度 length (m)	根数 piece (s)	长度 length (m)	根数 piece (s)
MW35–90135L/1	8.5	38.6	900	1300	1050	500	125	200	45	2200	9.0	2	16	2
MW35–140135L/1	12.7	57.5	1400		1100	600	140	250	55	3590		4		3
MW35–170135L/1	15.1	68.6	1700		1200	600	140	250	60	4230		5		4
MW35–120145L/1	11.2	51	1200	1450	1100	600	140	250	55	3690	11.0	3	19	2
MW35–170145L/1	15.0	68.2	1700		1200	600	160	250	65	5050		5		4
MW35–210145L/1	18.4	83.5	2100		1300	700	160	250	70	6230		6		5
MW35–140160L/1	13.6	61.7	1400	1600	1200	600	160	250	65	5030	12.5	4	20	3
MW35–170160L/1	15.7	71.3	1700		1300	700	160	250	70	6080		5		4
MW35–145180L/1	14.1	63.8	1450	1800	1200	600	160	250	70	5960	14.5	4	21	3
MW35–170180L/1	15.9	72.3	1700		1400	700	160	250	75	7210		5		4

吊运管坯、钢管用起重电磁铁
Lifting Electromagnet for Rebar and Steel Pipe

MW35高温型 Series MW 35 High Temperature Type

主要技术参数 (额定电压DC-220V，通电持续率TD-60%)
Main technical data (rated voltage DC-220v,duty cycle TD-60%)

型号 Model	冷态功率 Cold-state Power (kw)	冷态电流 cold-state current (A)	外形尺寸(mm) overall dimension							质量 mass (kg)	两台联用起吊能力 lifting capacity of two units			
											圆坯round billet Φ350		钢管steel pipe Φ420×δ20	
			A	B	C	D	E	F	G		长度 length (m)	根数 piece (s)	长度 length (m)	根数 piece (s)
MW35-90135L/2	8.9	40.5	900	1300	1050	500	125	200	45	2250	9.0	2	16	2
MW35-140135L/2	12.8	58.2	1400		1100	600	140	250	55	3670		4		3
MW35-170135L/2	15.8	71.8	1700		1200	600	140	250	60	4320		5		4
MW35-120145L/2	11.7	53.2	1200	1450	1100	600	140	250	55	3770	11.0	3	19	2
MW35-170145L/2	15.7	71.4	1700		1200	600	160	250	65	5160		5		4
MW35-210145L/2	18.9	85.9	2100		1300	700	160	250	70	6360		6		5
MW35-140160L/2	14.0	63.6	1400	1600	1200	600	160	250	65	5140	12.5	4	20	3
MW35-170160L/2	15.8	71.8	1700		1300	700	160	250	70	6220		5		4
MW35-145180L/2	14.7	66.8	1450	1800	1200	600	160	250	70	6030	14.5	4	21	3
MW35-170180L/2	15.7	71.4	1700		1400	700	160	250	75	7370		5		4

MW35超高温型 Series MW 35 Over-High Temperature Type

主要技术参数 (额定电压DC-220V，通电持续率TD-60%)
Main technical data (rated voltage DC-220v,duty cycle TD-60%)

型号 Model	冷态功率 Cold-state Power (kw)	冷态电流 cold-state current (A)	外形尺寸(mm) overall dimension							质量 mass (kg)	两台联用起吊能力 lifting capacity of two units			
											圆坯round billet Φ350		钢管steel pipe Φ426×δ20	
			A	B	C	D	E	F	G		长度 length (m)	根数 piece (s)	长度 length (m)	根数 piece (s)
MW35-90135L/3	9.4	42.7	900	1300	1100	500	125	200	45	2360	8.0	2	10.0	2
MW35-140135L/3	14.1	64.1	1400		1150	600	140	250	55	3800		4		3
MW35-170135L/3	17.0	77.3	1700		1250	600	140	250	60	4480		5		4
MW35-120145L/3	13.9	63.2	1200	1450	1150	600	140	250	55	3760	9.5	3	12.5	2
MW35-170145L/3	17.0	77.3	1700		1250	600	160	250	65	5360		5		4
MW35-210145L/3	21.0	95.5	2100		1350	700	160	250	70	6650		6		5
MW35-140160L/3	15.0	68.2	1400	1600	1250	600	160	250	65	5350	11.0	4	13	3
MW35-170160L/3	17.5	79.5	1700		1350	700	160	250	70	6490		5		4
MW35-145180L/3	15.6	70.9	1450	1800	1250	600	160	250	70	6350	13.0	4	13.5	3
MW35-170180L/3	17.6	80	1700		1450	700	160	250	75	7780		5		4

吊运管坯、钢管用起重电磁铁
Lifting Electromagnet for Rebar and Steel Pipe

MW85系列 Series MW85

本系列采用独特的磁路结构，磁极为圆弧型，以满足吊运钢管的要求。与挂钩、钢丝绳等吊运方式比较，电磁铁可以从正上方接触钢管，直接进行装卸作业，并可以有效的提高货场的利用率。作业时不会影响邻近的钢管，可以确保作业安全，并可节能，省力。

This series designed with unique magnetic circuit has round arc pole for lifting and transporting steel tubes.Compared to other lifting tools like hook or steel wire,it can touch the tube right from the top and be able to load and unload the materials directly,thus it improves working efficiency greatly.At the same time,that it will not touch nerighbouring tube provides a safety operation and engery-saving.

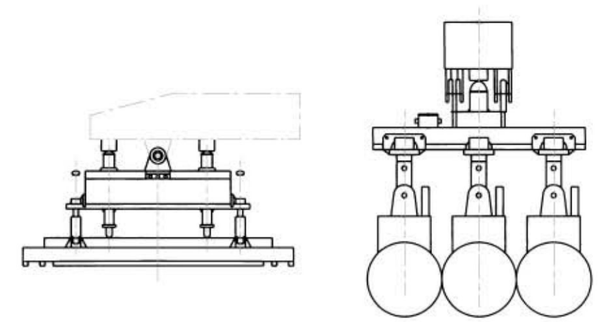

外形尺寸图
Overall Dimension Drawing

注：如图三组联用：
1.可吊3根口径小于32英寸钢管；
2.用旁边两组可起吊2根口径大于32英寸钢管；
3.用中央一组可起吊1根大口径钢管。

Note:See the above fig.There are three units combination
1.Three pieces of steel tube with diameter less than 32 inches can be lifted at a time;
2.Two pieces of steel tube with diameter more than 32 inches can be lifted through 2 magnets in a row at a time;
3.One piece of steel tube with big diameter can be lifted through the center magnet.

主要技术参数 (额定电压DC-220V，通电持续率TD-50%)
Main technical data (rated voltage DC-220v,duty cycle TD-50%)

型号 Model	自重 Self Weight (kg)	直流电压 DC Voltage (V)	冷态功率 Cold-state Power (kw)	两台联用起吊能力举例 lifting capacity of two units				
				外径 outer diameter (mm)	壁厚 thickness of wall (mm)	长度 length (mm)	起吊能力 lifting capacity (kg)	气隙 air gap (mm)
MW85-14035L/1	1900	220	7.5	Φ1420~Φ406	19~6.4	18000~6000	≤10000	≤2

吊运重轨、型钢用起重电磁铁

Lifting Electromagnet for Heavy Rail and Profiled Steel

MW17系列 Series MW17

本系列专用于吊运重轨。由于铁路运输建设的飞速发展，重轨超长、超重化，针对此类物料，我公司跟踪各大重轨项目，为用户提供了理想的电磁吊具，已在重轨专业生产厂家和大型铁道轨梁厂使用。

MW17系列电磁铁运用独特的“┌┐”型磁路，双线包结构，具有散热好、透磁深。可吊运重轨、型钢、异形坯等。有常温型和高温型。多采用两台或多台联吊。

This series is specially used for lifting and transporting heavy rail.As the heavy rail has become super-long and super-heavy today with the rapid development of railway construction,we took note at some important heavy rail projects in order to provide ideal product for users. The products have been used at professional heavy rail manufacturing factories and large railway track beam factories.This series which adopts" ┌┐ "type of magnetic circuit and double wrapping structure has good property of heat dispersion and deep penetration and can be used to lift and transport heavy rail,profiled steel,beam blank.There are two kinds:normal & high temperature type.Normaly it adopts multiple units.

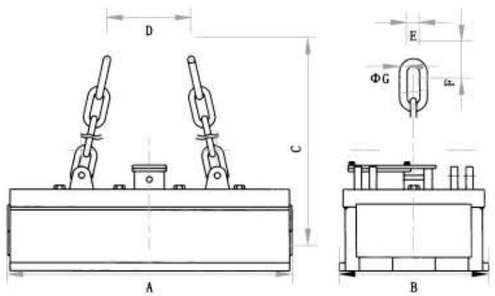

外形尺寸图
Overall Dimension Drawing

MW17常温型 Series MW17 Normal Temperature Type

主要技术参数 (额定电压DC-220V，通电持续率TD-60%)
Main technical data (rated voltage DC-220v,duty cycle TD-60%)

型号 Model	冷态功率 Cold-state Power (kw)	冷态电流 cold-state current (A)	外形尺寸(mm) overall dimension							质量 mass (kg)	起重能力举例(两台联用) lifting capacity of 2 units(An Example) 长：12.5米；重：60Kg length:12.5m;weight:60kg	
			A	B	C	D	E	F	G		长度 length (mm)	吸吊方式 lifting mode
MW17-12075L/1	6.0	27.3	1200	750	950	600	110	180	35	1420	7	只吸轨头 just absorb rail head
MW17-17075L/1	8.7	39.5	1700	750	950	600	110	180	40	2180	10	
MW17-12085L/1	6.3	28.6	1200	850	1000	600	125	200	45	1850	10	正反扣吸吊 Put two pcs (one face up,the other face down)together and life them
MW17-17085L/1	9.0	10.9	1700	850	1000	600	125	200	50	2970	14	

吊运重轨、型钢用起重电磁铁
Lifting Electromagnet for Heavy Rail and Profiled Steel

MW17高温型 Series MW17 High Temperature Type

主要技术参数 (额定电压DC-220V，通电持续率TD-60%)
Main technical data (rated voltage DC-220v,duty cycle TD-60%)

型号 Model	冷态功率 Cold-state Power (kw)	冷态电流 cold-state current (A)	外形尺寸 overall dimension(mm)							质量 mass (kg)	起重能力举例(两台联用) lifting capacity of 2 units(An Example) 长：12.5米；重：60Kg length:12.5m;weight:60kg	
			A	B	C	D	E	F	G		根数 piece (s)	吸吊方式 lifting mode
MW17-12075L/2	5.7	26	1200	750	900	600	110	180	35	1490	7	只吸轨头 just absorb rail head
MW17-17075L/2	8.6	39	1700	750	950	600	110	180	40	2290	10	
MW17-12085L/2	5.9	27	1200	850	1000	600	125	200	45	1950	10	正反扣吸吊 Put two pcs (one face up,the other face down)together and life them
MW17-17085L/2	8.8	42.3	1700	850	1000	600	125	200	50	3120	14	

MW27系列 Series MW27

本系列MW27系列电磁铁运用独特的“┌┐”型磁路。可吊运重轨、型钢、异形坯等。有常温型和高温型。多采用两台或多台联吊。

Electromagnet series MW27 which adopts unique" ┌┐ " type of magnetic circuit can lift and transport heavy rail,profiled steel and beam blank,etc.There are two kinds:normal and high temperature type.Normal multiple units are adopted.

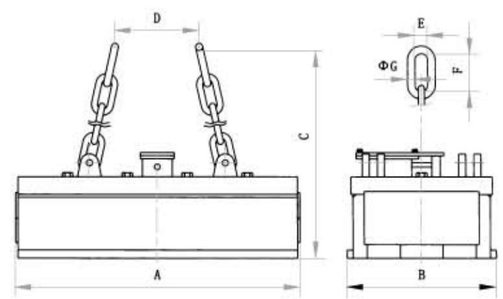

外形尺寸图
Overall Dimension Drawing

吊运重轨、型钢用起重电磁铁
Lifting Electromagnet for Heavy Rail and Profiled Steel

MW27常温型 Series MW27 Normal Temperature Type

主要技术参数 (额定电压DC-220V，通电持续率TD-60%)
Main technical data (rated voltage DC-220v,duty cycle TD-60%)

型号 Model	冷态功率 Cold-state Power (kw)	冷态电流 cold-state current (A)	外形尺寸 overall dimension(mm)							质量 mass (kg)	起重能力举例(两台联用) lifting capacity of 2 units(An Example) 长：12.5米；重：60Kg length:12.5m;weight:60kg	
			A	B	C	D	E	F	G		长度 length (mm)	吸吊方式 lifting mode
MW27-12065L/1	6.2	28.2	1200	650	1000	600	110	180	35	1650	7	只吸轨头 just absorb rail head
MW27-17065L/1	8.9	40.5	1700	650	1050	600	110	180	40	2520	10	
MW27-12075L/1	6.5	29.5	1200	750	1100	600	110	180	40	2000	10	正反扣吸吊 Put two pcs (one face up,the other face down)together and life them
MW27-17075L/1	9.1	41.4	1700	750	1150	600	125	200	45	3200	14	

MW27高温型 Series MW27 High Temperature Type

主要技术参数 (额定电压DC-220V，通电持续率TD-60%)
Main technical data (rated voltage DC-220v,duty cycle TD-60%)

型号 Model	冷态功率 Cold-state Power (kw)	冷态电流 cold-state current (A)	外形尺寸 overall dimension(mm)							质量 mass (kg)	起重能力举例(两台联用) lifting capacity of 2 units(An Example) 长：12.5米；重：60Kg length:12.5m;weight:60kg	
			A	B	C	D	E	F	G		长度 length (mm)	吸吊方式 lifting mode
MW27-12065L/2	5.8	26.4	1200	650	1000	600	110	180	35	1680	7	只吸轨头 just absorb rail head
MW27-17065L/2	8.9	40.5	1700	650	1050	600	110	180	40	2580	10	
MW27-12075L/2	6.2	28.2	1200	750	1100	600	110	180	40	2100	10	正反扣吸吊 Put two pcs (one face up,the other face down)together and life them
MW27-17075L/2	8.7	39.5	1700	750	1150	600	125	200	45	3300	14	

MW37系列 Series MW37

MW37系列电磁铁运用独特的型磁路。可吊运重轨、型钢、异形坯等，特别适用于吊运捆扎的型钢。有常温型和高温型。多采用两台或多台联吊。

Electromagnet series MW37 which adopts unique magnetic circuit can lift and transport heavy rail,profiled steel and beam blank,etc.especially suitable for bundled profiled steel.There are two kinds: normal and high temperature type.Normal multiple units are adopted.

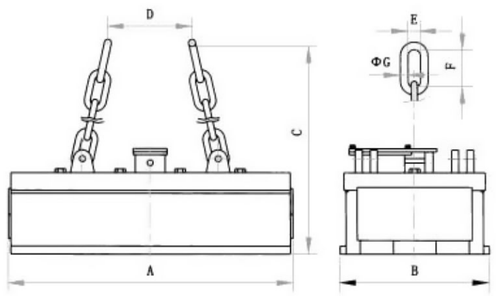

外形尺寸图
Overall Dimension Drawing

吊运重轨、型钢用起重电磁铁
Lifting Electromagnet for Heavy Rail and Profiled Steel

MW37常温型 Series MW 37 Normal Temperature Type

主要技术参数 (额定电压DC-220V，通电持续率TD-60%)
Main technical data (rated voltage DC-220v,duty cycle TD-60%)

型号 Model	冷态功率 Cold-state Power (kw)	冷态电流 cold-state current (A)	外形尺寸 overall dimension(mm)							质量 mass (kg)	吊运捆扎棒材能力 Lifting bundled rods capacity		
			A	B	C	D	E	F	G		被吸物规格 specification of attached material	台数 Units	捆数 bundles
MW37-110100L/1	8.1	36.8	1100	1000	1050	600	110	180	40	2160	捆扎H型钢、槽钢、捆扎工字钢 捆长12m，捆重5T，捆宽450，捆高600 bundle H-shape steel,channel steel,bundled I-shape steel (length:12m;weight:5t width 450;height:600)	4	2
MW37-140100L/1	10.3	46.8	1400		1050	600	125	200	45	2810			3
MW37-170100L/1	12.5	56.8	1700		1100	700	125	200	50	3470			4
MW37-110110L/1	8.2	37.3	1100	1100	1050	600	110	180	40	2550		3	2
MW37-140110L/1	10.5	47.7	1400		1100	700	125	200	45	3330			3
MW37-170110L/1	12.4	56.4	1700		1100	700	125	200	50	4100			4

MW37高温型 Series MW 37 High Temperature Type

主要技术参数 (额定电压DC-220V，通电持续率TD-60%)
Main technical data (rated voltage DC-220v,duty cycle TD-60%)

型号 Model	冷态功率 Cold-state Power (kw)	冷态电流 cold-state current (A)	外形尺寸 overall dimension(mm)							质量 mass (kg)	吊运捆扎棒材能力 Lifting bundled rods capacity		
			A	B	C	D	E	F	G		被吸物规格 specification of attached material	台数 Units	捆数 bundles
MW37-110100L/2	8.3	37.7	1100	1000	1050	600	110	180	40	2230	捆扎H型钢、槽钢、捆扎工字钢 捆长12m，捆重5T，捆宽450，捆高600 bundle H-shape steel,channel steel,bundled I-shape steel (length:12m;weight:5t width 450;height:600)	4	2
MW37-140100L/2	10.6	48.2	1400		1050	600	125	200	45	2910			3
MW37-170100L/2	13.0	59.1	1700		1100	700	125	200	50	3610			4
MW37-110110L/2	8.5	38.6	1100	1100	1050	600	110	180	40	2670		3	2
MW37-140110L/2	10.9	49.5	1400		1100	700	125	200	45	3460			3
MW37-170110L/2	13.1	59.5	1700		1100	700	125	200	50	4300			4

吊运钢板用起重电磁铁

Lifting Electromagnet for lifting and transporting steel Pipe

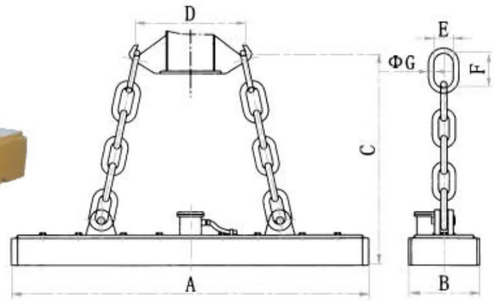

本系列专用为吊运中厚钢板而设计的。吊运作业安全准确迅速。考虑到长钢板吊运可能出现的弯曲变形而影响安全搬运，所以在吊运长尺寸钢板时，请使用多台电磁铁联用。对于中厚板（6mm~32mm）电磁铁的间距多取2.5~3.5m，两端外伸部分的长度可以取间距的二分之一。根据吊运张数的不同，又分为350型、400型、500型、650型四类。350型适合于中厚板厂，造船厂，机械制造厂，采用调磁控制方式，能起吊一张或一定张数钢板。400型适用于一次搬运尽量多的张数，可根据用户要求另行设计制造吊运700℃以下钢板用高温型产品。

This series is specially designde for lifting and transporting medium-thick steel plate.The whole operation is safe,exact and quick,When transport some long plates they easily go disto rtion.so we advice combination of multiple units to be used.For some plate which thickness is around the range of 6mm~32mm,space between 2 magnets should leave an extra 2.5~3.5m,the length at each end is that of one half of space.According to different lifting pieces,the series is divided into type 350 and type 400and type 500and type 650.Type 350 is suitable for medium-thick plate factory,ship building factory,machinery manufacturing factory,It is controlled by adjustable magnetic field,and can lift one or certain pieces of plates. Type 400 is suitable for lifting as many as possible pieces at a time;we can also produce the product less than 700℃ (high temperature type) for you.

MW84-□35系列 Series MW84-□35

主要技术参数（额定电压DC-220V，通电持续率TD-60%）

Main technical data（rated voltage DC-220v,duty cycle TD-60%）

型号 Model	冷态功率 Cold-state Power (kw)	冷态电流 cold-state current (A)	外形尺寸 overall dimension(mm)							质量 mass (kg)
			A	B	C	D	E	F	G	
MW84-9030T/1	0.4	1.9	900	350	900	350	110	180	32	185
MW84-10535T(L)/1	0.9（1.4）	4.1（6.4）	1050		960	400			32	330
MW84-14035T(L)/1	1.2（1.87）	5.5（8.5）	1400		940	500			32	430
MW84-17535T(L)/1	1.5（2.35）	6.8（10.68）	1750		940	700			32	510
MW84-21035T(L)/1	1.8（2.8）	8.2（12.7）	2100		920	800			32	600
MW84-24535T(L)/1	2.5（3.3）	11.4（15）	2450		980	850			32	720
MW84-26035L/1	3.35	15.2	2600		1050	850			35	855
MW84-26035L/2	3.1	14.1	2600		1080	850			35	900

注：MW84-9030T/1,额定电压为DC-110V
Note:rated voltage of MW84-9030t/1 is DC-110v

吊运钢板用起重电磁铁
Lifting Electromagnet for lifting and transporting steel Pipe

保证搬运张数举例

How many pieces of Steel will be definitely Lifted (For Example)

钢板宽度 width of steel plate	型号 Model \ 吸吊张数 pieces of steel to be lifted	钢板厚度 Plate thickness (mm)						
		6	8	10	12	16	20	32
1500(mm)	MW84-10535T(L)/1	4	3	3	3	2	2	1
	MW84-14035T(L)/1	4	4	3	3	2	2	1
	MW84-17535T(L)/1	4	4	3	3	2	2	1
	MW84-21035T(L)/1	4	4	3	3	2	2	1
	MW84-24535T(L)/1	4	4	3	3	2	2	1
2500(mm)	MW84-10535T(L)/1	1	1	1	1	2	1	1
	MW84-14035T(L)/1	3	2	2	2	2	1	1
	MW84-17535T(L)/1	4	3	3	3	2	2	1
	MW84-24040T(L)/1	4	3	3	3	2	2	1
	MW84-21035T(L)/1	4	3	3	3	2	2	1
4000(mm)	MW84-10535T(L)/1					1	1	1
	MW84-14035T(L)/1					1	1	1
	MW84-17535T(L)/1			1	1	1	1	1
	MW84-21035T(L)/1		1	2	2	1	1	1
	MW84-24535T(L)/1	2	2	2	2	2	2	1

注：MW84-9030T/1,四台联用可吊运长×宽×厚=3000～6000×900～1900×4～10mm钢板。
Note:MW84-9030t/l,which adopts combination of four units can lift and transpprt plate of length 3000~6000,width 900~1900,thickness 4~10(mm).

吊运钢板用起重电磁铁

Lifting Electromagnet for lifting and transporting steel Pipe

MW84-□40系列 Series MW84-□40

主要技术参数 (额定电压DC-220V，通电持续率TD-60%)
Main technical data (rated voltage DC-220v,duty cycle TD-60%)

型号 Model	冷态功率 Cold-state Power (kw)	冷态电流 cold-state current (A)	外形尺寸 overall dimension(mm)							质量 mass (kg)
			A	B	C	D	E	F	G	
MW84-12040L/1	3.0	13.6	1200	400	1020	400	110	180	30	550
MW84-16040L/1	3.2	14.5	1600	400	1000	700			35	690
MW84-20040L/1	5.0	22.7	2000	400	970	800			35	840
MW84-24040L/1	6.0	27.3	2400	400	890	850			35	910
MW84-13042L/2	2.4	10.9	1260	420	1040	500			30	650
MW84-17042L/2	3.7	16.8	1680	420	1050	700			35	850
MW84-21042L/2	4.0	18.2	2100	420	1000	800			35	1050
MW84-25042L/2	4.8	21.8	2520	420	990	850			35	1250

保证搬运张数举例 How many pieces of Steel will be definitely Lifted (For Example)

钢板宽度 width of steel plate	型号 Model / 吸吊张数 pieces of steel to be lifted		钢板厚度 Plate thickness (mm)						
			6	8	10	12	16	20	32
1500(mm)	MW84-12040L/1	MW84-13042L/2	6	5	4	4	3	3	1
	MW84-16040L/1	MW84-17042L/2	7	5	5	5	3	3	1
	MW84-20040L/1	MW84-21042L/2	7	5	5	5	3	3	1
	MW84-24040L/1	MW84-25042L/2	7	5	5	5	3	3	1
2500(mm)	MW84-12040L/1	MW84-13042L/2	3	3	3	2	2	2	1
	MW84-16040L/1	MW84-17042L/2	6	4	4	4	3	2	1
	MW84-20040L/1	MW84-21042L/2	6	4	4	4	3	3	1
	MW84-24040L/1	MW84-25042L/2	7	5	5	4	3	3	1
400(mm)	MW84-12040L/1	MW84-13042L/2					1	1	1
	MW84-16040L/1	MW84-17042L/2			1	2	2	2	1
	MW84-20040L/1	MW84-21042L/2		2	2	3	2	2	1
	MW84-24040L/1	MW84-25042L/2	3	3	3	3	2	2	1

MW84-□50系列 Series MW84-□50

主要技术参数 (额定电压DC-220V，通电持续率TD-60%)
Main technical data (rated voltage DC-220v,duty cycle TD-60%)

型号 Model	冷态功率 Cold-state Power (kw)	冷态电流 cold-state current (A)	外形尺寸 overall dimension(mm)							质量 mass (kg)
			A	B	C	D	E	F	G	
MW84-13050L/1	2.6	11.8	1300	500	1150	700	110	180	35	780
MW84-18050L/1	3.3	15	1800		1200	800			40	1180
MW84-26050L/1	5.1	23.2	2600		1250	850			45	1480
MW84-13050L/2	2.5	11.4	1300		1180	700			35	830
MW84-18050L/2	3.1	14.1	1800		1230	800			40	1170
MW84-26050L/2	4.9	22.3	2000		1280	850			45	1590

吊运钢板用起重电磁铁
Lifting Electromagnet for lifting and transporting steel Pipe

保证搬运张数举例 How many pieces of Steel will be definitely Lifted (For Example)

钢板宽度 width of steel plate	型号 Model / 吸吊张数 pieces of steel to be lifted	钢板厚度 Plate thickness (mm)						
		6	8	10	12	16	20	32
1500(mm)	MW84-13050L/1	7	6	5	4	3	3	1
	MW84-18050L/1	8	7	6	5	4	3	2
	MW84-26050L/1	8	7	6	5	4	3	2
2500(mm)	MW84-13050L/1	4	4	3	3	3	2	1
	MW84-18050L/1	7	5	5	4	4	3	2
	MW84-26050L/1	8	7	6	5	4	3	2
4000(mm)	MW84-13050L/1				1	1	1	1
	MW84-18050L/1		3	3	2	2	1	1
	MW84-26050L/1	4	4	3	3	2	2	1

MW84-□65系列 Series MW84-□65

主要技术参数 (额定电压DC-220V，通电持续率TD-60%)
Main technical data (rated voltage DC-220v,duty cycle TD-60%)

型号 Model	冷态功率 Cold-state Power (kw)	冷态电流 cold-state current (A)	外形尺寸 overall dimension(mm)							质量 mass (kg)
			A	B	C	D	E	F	G	
MW84-13065L/1	4.5	20.5	1300	650	1050	600	100	220	40	1370
MW84-20065L/1	6.8	30.9	2000		1050	600			50	2050
MW84-26065L/1	9.1	41.4	2600		1150	700			55	2790

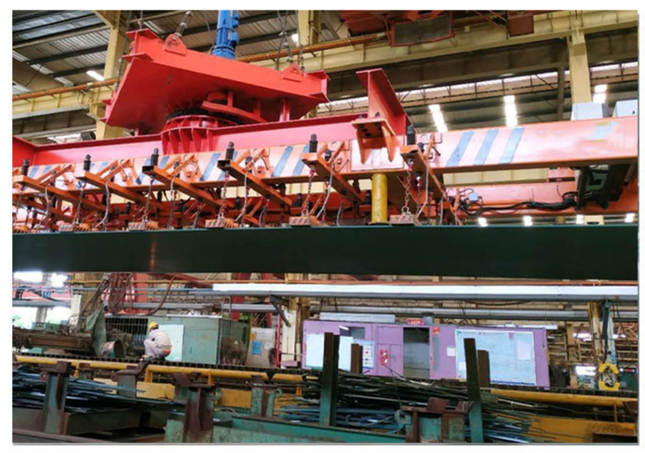

吊运钢板用起重电磁铁

Lifting Electromagnet for lifting and transporting steel Pipe

保证搬运张数举例 How many pieces of Steel will be definitely Lifted (For Example)

钢板宽度 width of steel plate	型号 Model \ 吸吊张数 pieces of steel to be lifted	钢板厚度 Plate thickness (mm)						
		6	8	10	12	16	20	32
1500(mm)	MW84-13065L/1	10	7	6	6	5	4	3
	MW84-20065TL/1	11	8	7	6	5	4	3
	MW84-26065TL/1	11	8	7	6	5	4	3
2500(mm)	MW84-13065TL/1	6	6	5	5	4	3	2
	MW84-20065TL/1	10	7	7	6	5	4	3
	MW84-26065TL/1	11	8	7	5	5	4	3
4000(mm)	MW84-13065TL/1				3	2	2	1
	MW84-20065L/1		3	4	4	3	2	2
	MW84-26065L/1	5	5	5	5	4	3	2

MW04系列 Series MW04

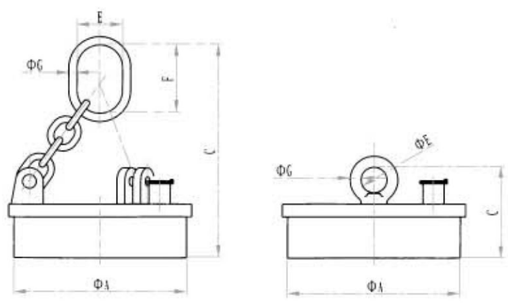

外形尺寸图
Overall Dimension Drawing

主要技术参数 Main technical data

型号 Model	冷态功率 Cold-state Power (kw)	冷态电流 cold-state current (A)	外形尺寸 overall dimension(mm)				质量 mass (kg)	单台起吊最大尺寸 max.dimension of single set(mm) 长×宽 length×width	多台时一台负担尺寸 each sharing dimension among multiple units(mm)长×宽 length×width	吸力 attracting force	
			A	B	C	D				板厚 thickness of plate (mm)	周边固定 perimeter fixed (kg)
MW04-17T/1	0.1	0.45	165	113	10	30	7	1200×1200	600×1200	3.2	≥100
										6	≥200
MW04-22T/1	0.2	0.91	216	147	40	16	15	1400×1400	700×1400	6	≥300
										10	≥600
MW04-26T/1	0.22	1	260	130	50	25	20	1500×1500	750×1500	10	≥700
										20	≥1000
MW04-32T/1	0.25	1.14	318	178	60	25	30	1600×1600	800×1600	10	≥800
										20	≥2000
MW04-40T/1	0.40	1.82	406	480	100/55	16	75	2500×2500	1000×2500	12	≥1300
										32	≥4000

吊运钢板用专用电磁铁

Lifting Electromagnet for lifting and transporting steel Pipe

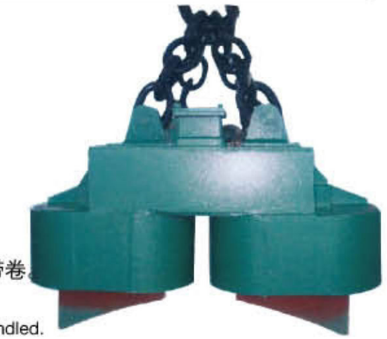

该类产品用于吸吊钢带卷。分为垂直吊运型、水平吊运型和通用型（既可以垂直吊运又可以水平吊运）。高温型特殊电磁铁专用于卷板新型退火工艺，能在100℃～600℃高温中工作，可垂直或水平吊运带卷。

This series is used for coiled steel and has three kinds:vertical type,horizontal type and general type which can lift material both vertically and horizontally.High temperature type can be used at anneal process and can lift material vertically or horizontally at high remperature range from 100℃ to 600℃.

垂直吊运型——电磁铁吸附带卷的端面，适合吊运捆扎或未捆扎的带卷。
水平吊运型——电磁铁吸附带卷的侧面，带卷必段捆扎。

Vertical type–magnet attracts its end face,suitable for coiled steel bundled or unbundled.
Horizontal type–magnet attracts its side face,suitable for bundled coiled steel

MW16 吸吊卧卷系列 Series MW16 for Lifting Horizontal Coil

主要技术参数 Main technical data

型号 Model	冷态功率 Cold-state Power (kw)	冷态电流 cold-state current (A)	外形尺寸overall dimension (mm)						质量 mass (kg)	钢带卷 Coiled Steel		
			A	B	C	E	F	G		重量 weight(t)	外径 outer diameter (mm)	宽度 width (mm)
MW16-11590L/1	13.5	61.4	1160	916	1600	170	210	50	2150	9	1500	1100
MW16-12595L/1	15.5	70.5	1260	960	1600	170	250	65	3020	12	1900	900
MW16-12595L/2	13.1	59.6	1260	960	1650	170	250	65	3130	12	1900	900
MW16-190135L/1	23	104.5	1890	1330	2000	220	500	90	6230	30	2040	2100
MW16-190135L/2	22	100	1890	1330	2050	220	500	90	6370	30	2040	2100




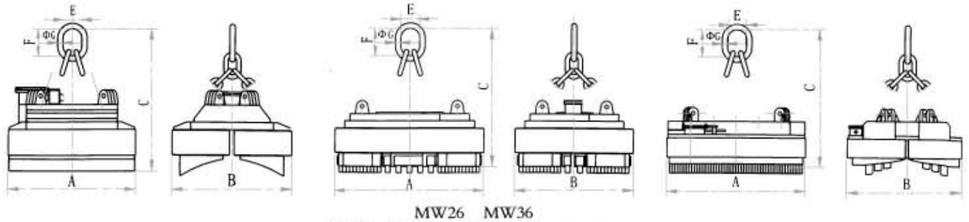

MW26 MW36
外形尺寸图 Owerall Dimension Drawing

吊运厚板专用电磁铁
Lifting Electromagnet for Thick Plate

MW03系列 Series MW03

根据整块钢板导磁率大的特性，具有自重轻，吸力大的特点。用于吸吊大型钢锭、连铸板坯、厚钢板。吊运6m以上板坯时为了避免偏心而产生倾斜，请使用两台联吊。

Owing to big magnetoconductivity,this product has light self-weight and powerful attraction force and can be used for large steel ingot,co-casting slab caster,thick steel plate.To avoid tilting caused by off-center,When to lift a slab caster more than 6m, we advice you to use combination of two units.

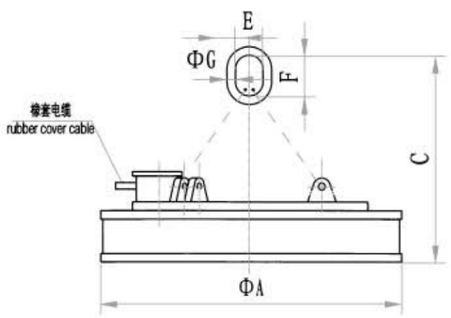

外形尺寸图
Overall Dimension Drawing

MW03常温型 Series MW03 Normal Temperature Type

主要技术参数 (额定电压DC-220V，通电持续率TD-60%，吊运温度150℃以下)
Main technical data (rated voltage DC-220v,duty cycle TD-60%,steel temperature:below 150℃)

型号 Model	冷态功率 Cold-state Power (kw)	冷态电流 cold-state current (A)	外形尺寸 overall dimension(mm)					质量 mass (kg)	起重能力举例 An example of lifting capacity (T)
			A	C	E	F	G		
MW03-70L/1	3.3	15/10.2	700	950	110	180	32	540	6
MW03-90L/1	4.6	20.9/14.2	900	920	125	160	50	840	10
MW03-110L/1	5	22.7/15.5	1100	1080	170	250	65	1590	15
MW03-120L/1	6.4	29.1/19.8	1200	1290	170	250	65	1980	18
MW03-130L/1	6.2	28.2/19.2	1300	1400	250	400	70	3100	20
MW03-140L/1	8.2	37.3/25.3	1400	1100	200	280	90	2730	25
MW03-160L/1	12	54.5/37.1	1600	1660	220	500	90	3770	32
MW03-180L/1	17.5	79.5/54.1	1800	1910	230	500	115	5000	40
MW03-200L/1	23	105.5/72.3	2000	2200	320	500	125	6200	53

吊运厚板专用电磁铁
Lifting Electromagnet for Thick Plate

MW03高温型 Series MW03 High Temperature Type

主要技术参数 (额定电压DC-220V，通电持续率TD-60%，吊运温度150~600℃)
Main technical data (rated voltage DC-220v,duty cycle TD-60%,steel temperature:below 150~600℃)

型号 Model	冷态功率 Cold-state Power (kw)	冷态电流 cold-state current (A)	外形尺寸(mm) overall dimension					质量 mass (kg)	起重能力举例 An example of lifting capacity (T)
			A	C	E	F	G		
MW03-70L/2	2.7	12.3/8.3	700	990	110	180	32	640	6
MW03-90L/2	3.4	15.5/10.5	900	1050	125	160	50	980	10
MW03-110L/2	4.4	20/13.6	1100	1140	170	250	65	1600	15
MW03-120L/2	5.46	24.8/16.9	1200	1360	170	250	85	2100	18
MW03-130L/2	7.1	32.3/21.9	1300	1392	250	400	70	3050	20
MW03-140L/2	7.9	35.9/24.4	1400	1175	200	280	90	3300	25
MW03-160L/2	8.6	39.1/26.6	1600	1720	220	500	90	4300	32
MW03-180L/2	12.5	56.8/37.9	1800	2000	230	500	115	5800	40
MW03-200L/2	17.8	80.9/53.9	2000	2200	320	500	125	7120	53

MW03超高温 Series MW03 Over-High Temperature Type

主要技术参数 (额定电压DC-220V，通电持续率TD-60%，吊运温度150～600℃)
Main technical data (rated voltage DC-220v,duty cycle TD-60%,steel temperature:below 150～600℃)

型号 Model	冷态功率 Cold-state Power (kw)	冷态电流 cold-state current (A)	外形尺寸(mm) overall dimension					质量 mass (kg)	起重能力举例 An example of lifting capacity (T)
			A	C	E	F	G		
MW03-70L/3	2.4	10.9/7.2	700	990	110	180	32	680	5
MW03-90L/3	2.9	13.2/8.8	900	1050	125	160	50	1050	8
MW03-110L/3	3.8	17.2/11.5	1100	1140	170	250	65	1710	13
MW03-120L/3	4.7	21.2/14.1	1200	1360	170	250	85	2250	15
MW03-130L/3	6.0	27.3/18.2	1300	1392	250	400	70	3270	17
MW03-140L/3	6.3	28.7/19.1	1400	1175	200	280	90	3540	21
MW03-160L/3	6.9	31.6/20.9	1600	1720	220	500	90	4600	26
MW03-180L/3	9.7	44.1/29.4	1800	2000	230	500	115	6200	35
MW03-200L/3	19.0	86.4/57.6	2000	2200	320	500	125	7620	46

翻转、侧吊用电磁铁

Lifting Electromagnet for Turning and Side Hung

适用于板坯上、下表面的检查和精整时的翻转作业，也可以用于厚板和管坯的吊运。当使用导向柱的起重机时能在吊运状态下使板坯翻转180° 。

The product is suitable for turning slab caster for the purpose of checking & surface finishing its up and down surface and for lifting and transporting thick plate and tube caster as well.it can turn slab caster around 180° degree when being lift by the crane equipped with guide column.

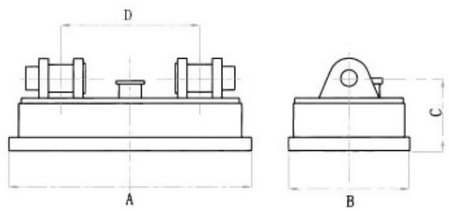

外形尺寸图
Overall Dimension Drawing

MW73系列 Series MW73

适用于板坯上、下表面的检查和精整时的翻转作业，也可以用于厚板和管坯的吊运。当使用导向柱的起重机时能在吊运状态下使板坯翻转180° 。

The product is suitable for turning slab caster for the purpose of checking & surface finishing its up and down surface and for lifting and transporting thick plate and tube caster as well.it can turn slab caster around 180° degree when being lift by the crane equipped with guide column.

主要技术参数 高温型(700℃以下，额定电压DC-220V，通电持续TD-60%)
Main technical data for high temperature type(below700℃,rated voltage DC-220V,duty cycle TD-60%)

型号 Model	冷态功率 Cold-state Power (kw)	冷态电流 cold-state current (A)	外形尺寸(mm) overall dimension				质量 mass (kg)	两台联用时吊运、翻转能力 lifting & transporting and turning capacity
			A	B	C	D		
MW73-7540L/2	2.2	10	750	400	500	420	500	6
MW73-10055L/2	2.5	11.4	1000	550	490	530	1000	10
MW73-15065L/2	4.4	20	1500	650	520	700	1870	15
MW73-20090L/2	6.0	27.3	1900	900	600	1000	3300	40
MW73-140110L/2	3.77	17.1	1400	1100	580	700	2575	28
MW73-200130L/2	7.5	34.1	2000	1300	600	1000	3500	45

MW83系列 Series MW83

侧吊电磁铁是专用于钢板吸吊时可旋转小于90° 的电磁铁，可平吸侧放，或侧吸平放，一般多台联用。

This side hung produtc is specially used for lifting and transporting steel plate whose rotation is not more than 90° ,It can attract horizontally & side discharging and attract vertically & horizontal disarging.Normally multiple units are needed.

主要技术参数 Main technical data

型号 Model	冷态功率 Cold-state Power (kw)	冷态电流 cold-state current (A)	外形尺寸(mm) overall dimension						质量 mass (kg)	起吊能力 lifting capacity (T/unit)
			A	B	C	E	F	G		
MW83-8040L/1	2.4	10.9	800	400	750	125	200	45	500	2
MW83-12545L/1	3.6	16.4	1200	450	950	125	200	45	1000	3
MW73-16050L/1	4.7	21.4	1600	500	1150	125	200	50	1870	4
MW73-20055L/1	5.8	26.4	2000	550	1350	125	200	50	3300	5

电磁铁常用连接方式

Magnet Connection Drawing

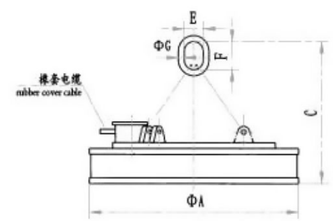

单挂点A型：单挂点与行车主钩或挂梁联接
Single Suspending Point Mode A:the single suspending point is jointed with crane hook or suspension beam

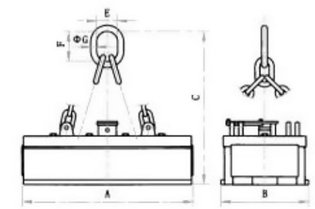

单挂点AⅠ型：单挂点与行车主钩或挂梁联接
Single Suspending Point Mode AⅠ:the single suspending point is jointed with crane hook or suspension beam

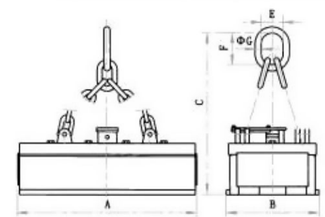

单挂点AⅡ型：单挂点与行车主钩或挂梁联接
Single Suspending Point Mode AⅡ:the single suspending point is jointed with crane hook or suspension beam

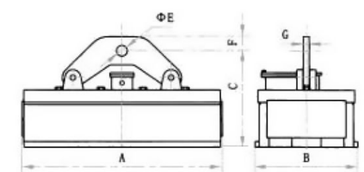

单挂点B型：单攀与行车或挂梁联接
Single Suspending Point Mode B:the single lifting hook is jointed with crane hook or suspension beam

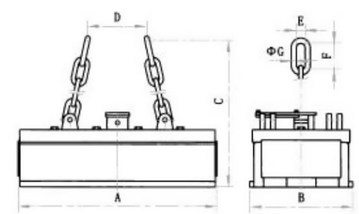

双挂点CⅠ型：双挂点与行车主钩或挂梁联接
Double Suspending Point Mode CⅠ:the double suspending points are jointed with crane hook or suspension beam

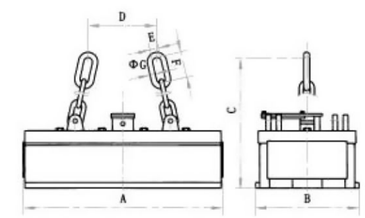

双挂点CⅡ型：双挂点与行车主钩或挂梁联接
Double Suspending Point Mode CⅡ:the double suspending points are jointed with crane hook or suspension beam

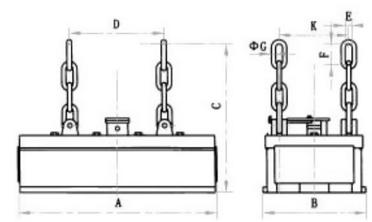

四挂点DⅠ型：四挂点与行车主钩或挂梁联接
Four Suspending Point Mode DⅠ:the four suspending points are jointed with crane hook or suspension beam

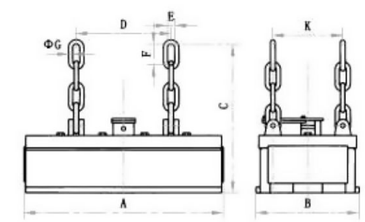

四挂点DⅡ型：四挂点与行车主钩或挂梁联接
Four Suspending Point Mode DⅡ:the Four suspending points are jointed with crane hook or suspension beam

除铁器
Separator

概 述

除铁器时一种生产强大磁场吸引力的设备，广泛用于冶金、矿山、选煤厂、电厂、陶瓷、玻璃、水泥、建材、化工、食品、饲料、垃圾处理行业。它能将混杂在物料中的铁磁性杂质清除，以保证加工过程中的破碎机、研磨机等机械设备安全正常工作，同时可有效地防止因大、长铁件划裂输送机皮带的事故发生，亦可显著提高原料品位。

我公司生产的电磁除铁器，通过引进消化国外的先进技术，采用计算机优化设计，已形成电磁、永磁两大类，多种规格的产品，具有磁势大、透磁深、吸力强、耗能低、环境适应性强、安全可靠等特点。

产品特点

采用全密封自然冷却结构，能防止潮湿空气、粉尘和有害气体对线圈的侵蚀。对气候及环境的适应性强，户内、户外均可使用。

磁路经特殊设计，透磁深度大. 并且空间磁场的几何形状为近似矩形的半球状。因此较其它同类产品有更强的吸引力。

以安装在带式输送机中部位置，确定产品的除铁能力。如果将其安装在机头位置使用，除铁能力可提高30%。

以热态电流时的除铁能力作为考核产品性能的重要指标，这样更切合实际，更能有效地发挥除铁器的作用。

产品配套性能好，各种整流设备功能齐备，能适应各种场合的使用要求。

Profile

Iron remover is an equipment of producing strong magnetic field attraction, which is widely used for metallurgy, mine, coal preparation plant, electric power plant, ceramics, glass, cement, building materials, chemical industry, food, fodder, waste disposal industry. It can clear away the magnetic impurities mixed in materials, so as to ensure the safe and normal functioning of the mechanical equipments like crushing machine and lapping machine etc. In the meantime, it can effectively prevent accident due to conveyor belt cracked by the long and big ironwork from happening as well as can prominently raise the grade of raw materials.

Via introducing and digesting foreign advanced technology and adopting computer elaboration design, the electromagnetic iron remover produced by our company has formed into two broad categories of electromagnet and permanent magnet as well as products with variety of specifications. It has the features that magnetic potential is strong, magnetic penetration is deep, attraction power is strong, energy consumed is low, environmental adaptability is strong and it is safe and reliable.

Features of products:

By adopting sealed natural cooling structure, the iron remover can prevent the coil erosion from damp air, dust and harmful gas. With a good adaptability for climate and environment, it can be both used indoors and outdoors.

With a special designed-magnetic circuit, its magnetic penetration depth is great. And the geometry shape of its space magnetic field is hemispheric approximate to rectangular. So it has stronger attraction compared with other products of the same kind.

The product's ability of removing iron will be ensured through installing it at the middle part of the ribbon conveyor. If installing it at the head section, this ability will be increased by 30%.

It regards the ability of removing iron under the circumstance of current in hot state as an important index of evaluating products' properties, which is more suitable to reality and will be more effectively perform the function of iron remover.

The product has a good matched performance and various kinds of rectifying installation with fully-prepared functions, which can adapt to the operating requirements of various occasions.

型号说明 Model explanation:

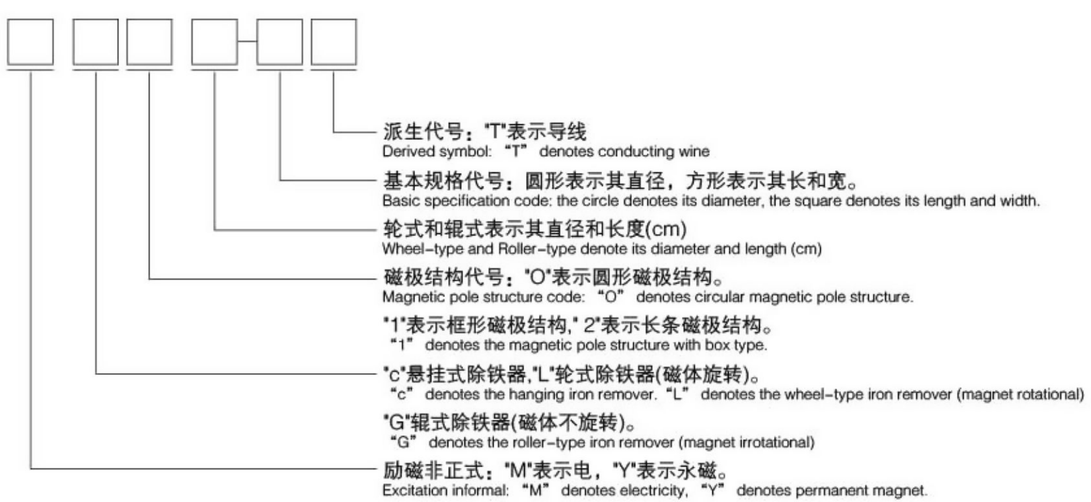

除铁器
Separator

圆形电磁除铁器 MC03(RCDB)系列
Circular electromagnetic iron remover MC03 (RCDB) series

本系列产品为长期工作制的电磁除铁器。悬挂系统配有可调挂钩，能方便地调整架设高度。

按图所示四种悬挂方式安装在带式输送机的中部或头部使用。适合于从较大粒度矿石、煤炭、焦炭、石灰石、碎石中除去铁磁性异物。

Product of this series is the electromagnetic iron remover with long-term functioning system. The hanging system is equipped with adjustable hook, which is convenient for adjusting the height of erection.

As the four hanging ways illustrated in the pictures, it is should be installed at the middle part or the head section of the ribbon conveyor. It is suitable to remove ferromagnetic foreign objects from ore with quite large size, coal, coke, limestone and crushed stones.

链条悬挂
Hanging of chain

手动运行小车悬挂
Hanging of manual operation car

链动小车悬挂
Hanging of chain moving car

电动运行小车悬挂
Hanging of electric running car

外形尺寸图 Dimensions Figure

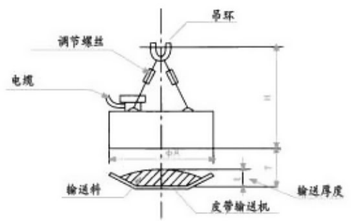

工作原理示意图 Schematic diagram of

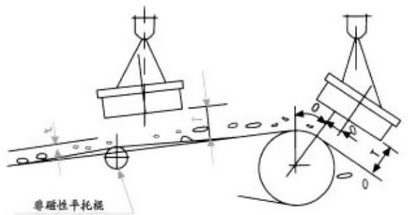

主要技术参数 Main technical data

产品型号 Model	对应行标型号 Industry Standard Model	标准架设高度T (mm) Standard erection height of	输送皮带宽度 (mm) Conveyor belt width	外形尺寸(mm) overall dimension 外径 (A) Outer diameter	悬挂高度 (H) Suspension height of	额定电压 (V) rated voltage	冷态消耗功率 (KW) power consumption in cold state	自重 (kg) Weight	配套电控（单台除铁器用） Supporting electronic control
MC03-30T	RCDB-3	100	300	300	600	48	0.18	77.5	SSTM-0.5D-D
MC03-40T	RCDB-4	120	350	400	740	50	0.48	120	
MC03-50T	RCDB-5	150	500	500	700	75	0.8	198	SSTM-1.5D-D
MC03-70T	RCDB-7	210	650	700	860	110	1.89	500	SSTM-3.1D-D
MC03-90T	RCDB-8	260	800	900	1140	110	2.48	968	
MC03-100T	RCDB-9	290	900	1000	890	220	3.94	1070	SSTM-4.2D-D
MC03-110T	RCDB-10	320	1000	1100	1450	220	4.1	1079	
MC03-130T	RCDB-12	400	1200	1300	1200	220	6.18	2036	SSTM-6.2D-D
MC03-150T	RCDB-14	420	1400	1500	1350	220	8.85	3100	SSTM-9.3D-D
MC03-165T	RCDB-16	460	1600	1650	1500	220	10.5	4028	SSTM-12D-D
MC03-180T	RCDB-18	500	1800	1800	1640	220	11.1	4882	SSTM-12D-D

除铁器
Separator

自卸式电磁除铁器 MC02(RCDB)系列
Self-dumping electric magnetic iron remover MC02 (RCDB) series

本系列产品为长期工作制的自卸式电磁除铁器，增设了台架、卸铁皮带等部件、悬挂在带式输送机上，通过卸铁皮带运转，可不断地自动将除铁器吸上来的铁磁性异物，抛进集铁箱，达到自动除铁的目地。

最适用于从较厚料层和较大粒度矿石、煤炭、焦炭、石灰石、碎石中除去铁磁性异物。

Product of this series is the self-dumping electric magnetic iron remover with long-term functioning system. It adds the components like the rack, the belt for iron dumping etc. It is hung at the ribbon conveyor and can continuously thrown the ferromagnetic foreign objects attracted by iron remover into the box for iron collection through the functioning of the belt for iron dumping, to achieve the aim of removing iron automatically.

What it suits most is to remove the ferromagnetic foreign objects from the thicker layer, ore with larger size, coal, coke, limestone and crushed stones.

外形尺寸图 Dimensions Figure

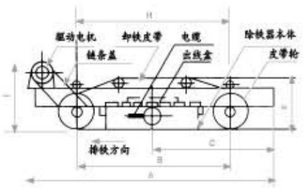

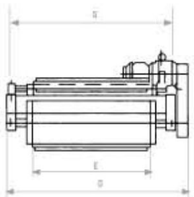

主要技术参数 Main technical data

产品型号 Model	对应行标型号 Industry Standard Model	标准架设高度 T(mm) Standard erection height of	输送皮带宽度 (mm) Conveyor belt width	额定电压 (V) rated voltage	冷态消耗功率(KW) power consumption in cold state	自重 (kg) Weight	外形尺寸 (mm) overall dimension									卸扣	驱动电机容量 Drive motor capacity	配套电控(单台除铁器用) Supporting electronic control
							A	B	C	D	E	F	G	H	I			
MC12-5060L	RCDB-5	160	500	110	1.03	1074	2300	1330	1100	914	500	520	710	850	720	2.7	1.5	SSTM-1.5D1-D
MC12-6070L	RCDB-6	170	650	110	1.4	1160	2400	1400	1150	1068	650	520	860	928	720	2.7	1.5	
MC12-8090L	RCDB-8	250	800	110	2.6	1470	2750	1600	1360	1270	800	580	1065	1100	780	2.7	2.2	SSTM-3.1D1-D
MC12-9010L	RCDB-10	260	1000	110	2.9	2000	2900	1770	1465	1480	900	625	1165	1200	768	2.7	2.2	
MC12-110130L	RCDB-12	310	1200	220	4.2	2700	3200	2000	1590	1680	1000	625	1375	1400	782	3.3	2.2	SSTM-6.2D1-D
MC12-130145L	RCDB-14	350	1400	220	5.8	4200	3460	2310	1680	1853	1200	673	1584	1650	886	3.3	4	
MC12-150175L	RCDB-16	410	1600	220	8.2	6020	3800	2620	1850	1990	1400	725	1780	1920	945	4.1	4	SSTM-9.3D1-D
MC12-165190L	RCDB-18	460	1800	220	9.8	8260	3850	2700	1950	2250	1600	675	1930	1900	1050	4.1	4	SSTM-12D1-D
MC12-180210L	RCDB-20	510	2000	220	11.6	7900	4400	3000	2100	2420	1800	710	2087	2100	1072	6.8	5.5	
MC12-230230L	RCDB-22	550	2200	220	22.5	15500	4600	3200	2250	3000	2000	850	2700	2100	1320	16	5.5	SSTM-25D1-D
MC12-250250L	RCDB-24	570	2400	220	25	17500	4800	3400	2450	3200	2200	1000	3000	2300	1380	16	7.5	

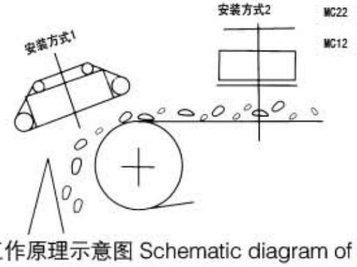

工作原理示意图 Schematic diagram of

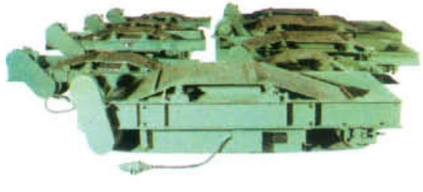

除铁器
Separator

矿石自动回收式电磁除铁器 MC01系列
Magnetic iron remover with ore automatically recycled MC01 series

本系列产品是为从磁性矿石中除去有害铁件而专门设计的。其工作制为TD=10%。使用时悬挂在皮带输送机上，并需配以电动小车，金属探测器，PC程控整流控制设备。经吸引、分选、除铁、回收等程序实现自动，并安全地从输送的磁性矿石中除去有害铁件，同时将被吸的矿石自动送回皮带输送机上得到回收。

适用于从磁铁矿石、烧结矿、球团矿中除去铁磁性异物。

Product of this series is special-designed for removing harmful iron piece from magnetic ores. Its working system is TD=10%. When using, it is should be hung on the belt conveyor and it needs to match with electric vehicles, metal detectors, PC program-controlled rectifier control equipment. Via realizing automatic of the program like attraction, separation, iron removing, recycle etc. and removing harmful iron piece from the conveyed magnetic ores safely, it automatically sends back the attracted ores to the belt conveyor for recycle.

It is fit for removing ferromagnetic foreign object from magnetic ores, agglomerate and pellet.

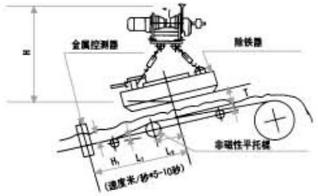

外形尺寸图 Dimensions Figure

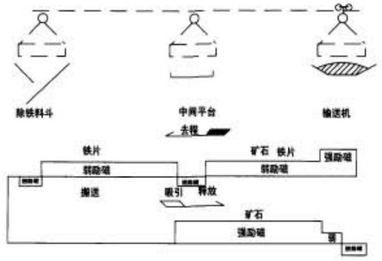

注：L1、L2根据除铁器型号不同而取不同的值。H1、一般取100～120mm。

工作原理示意图 Schematic diagram of

主要技术参数 Main technical data

产品型号 Model	标准架设高度T(mm) Standard erection height of	输送皮带宽度(mm) Conveyor belt width	外形尺寸 (mm) overall dimension		额定电压 (V) rated voltage	冷态消耗功率 (KW) power consumption in cold state	自重 (kg) Weight	运行小车 (t) Run car
			ΦA	H				
MC01-80L	300	650	800	1000	100/290/350	14/9.8/1.15	521	1.5
MC01-90L	300	800	900	950		17.4/14/1.4	648	1.5
MC01-100L	350	900	1000	1040		25/17/2	841	1.5
MC01-120L	400	1000	1200	1080		32/21/2.53	1193	3
MC01-130L	450	1000	1300	1190		34/23.5/2.97	1794	3
MC01-150L	500	1200	1500	1790		43/29.8/3.54	2258	5
MC01-165L	550	1400	1650	1540		55/37.7/4.5	3122	5
MC01-180L	600	1600	1800	1630		64/44.5/5.3	3802	5
MC01-210L	650	1800	2100	1730		99/66/7.9	5813	10
MC01-240L	750	2100	2400	1850		118/81/9.7	6900	10

注：
1. 冷态消耗功率中的三个功率值，表示不同电压时的功耗。
2. 1.5吨电动小车自重115kg，功率0.75kw,安装高280mm，采用25号工字钢。3吨、5吨电动小车自重180kg,功率0.8kw，安装高350mm，采用32a-32c号工字钢。（GB706-65）。

Note:
1. The three power values of the power consumption in cold state refer to power consumption in different voltage.
2. The dead-weight of the 1.5 tons' electric running car is 115kg, the power is 0.75kw, the mounting height is 280mm and it uses h beam in class 25. The dead-weight of the 3 tons and 5 tons' electric running car is 180kg, the power is 0.8kw, the mounting height is 350mm and it uses h beam in class 32a-32c. (GB706-65)

永磁吸吊器
Permanent-magnet Lifter Series

永磁吸吊器

采用高能磁体材料，运用科学磁路原理制作。吸力大、体积小、自重轻，操作安全方便。摒弃起重电磁铁配套繁杂，需提供电源的缺点，是一种节约能源的理想吊具。适用于造船、工程机械、汽车等行业常温钢板起吊、搬运。磁路设计分为YX、YC两大系列。

YX2、YC2系列采用棘轮式结构，自动循环完成吸、放料动作，适用于吊运短而厚的钢板；YX3系列适用于多台联吊长而薄的钢板，人工卸料，杠杆式结构能较好保证同步性。

Permanent-magnet Lifter Series

YX is made of high-energy magnetic material adopting scientfic magnet circuit theory featuring huge attraction force,compact,light dead-weight and convenient and safe for operation.It is an ideal energy-economizing and movre convenient lifter than the electromagnet lifter which must be equipped with complicated lind-up units and power supply backup. It is used to lift and transfer the normal temperature steel plates in ship-making industrg,engineering mechanical industry,automobile industry and so on.There have three series of YX and YC according to their material unloading modes.

Series YX2,YC2 for lifting short and thick steel plate using ratchet wheel unit to hold and release the materials in auto cycle;series YX3 for manually handing long and thin steel plates in combined units.The level type structure can guarantee the unit to be operated in synchronism.

型号说明 Model Designation

Y□ □—□

- 起重能力 (t) Lifting capacity
- 设计代号 Design code
- 永磁吸吊器 Permanent-magnet lifter
  - X 系列：顶杆式 Series X:Top rod type
  - C系列：磁路转换式 Series C:Electromagnet circuit changeover type

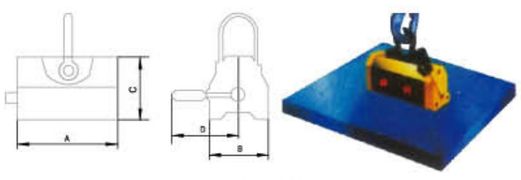

YC 1产品结构图

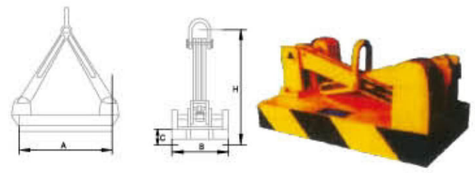

YC 2产品结构图

主要技术参数 (YC 1系列)
Main technical data (Series YC1)

型号 Model / 参数 Date	最大拉拖力 Max.attraction force (kg)	额定起重 Rated lifting capacity (kg)	外形尺寸 overall dimension(mm)				质量 mass (kg)
			A	B	C	D	
YC1-0.2	600	200	130	110	124	250	12
CY1-0.3	900	300	180	110	124	270	16
CY1-0.5	1500	500	258	110	124	380	25
CY1-1	3000	1000	263	180	219	412	68
CY1-2	6000	2000	388	220	269	552	150

永磁吸吊器
Permanent-magnet Lifter Series

YX 系列永磁吸吊器
Permanent-magnet Lifter Series YX

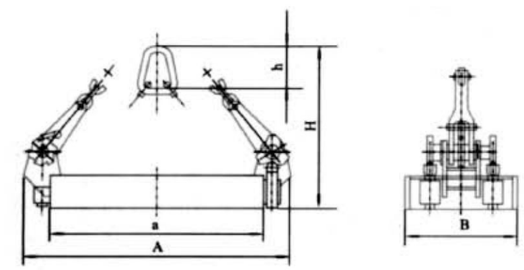

YX 2系列外形尺寸图
overall dimension drawing for series YX 2

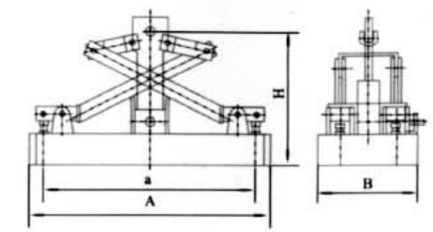

YX 3系列外形尺寸图
overall dimension drawing for series YX 3

主要技术参数(YX 2系列) Main technical data(Series YX 2)

型号 Model / 参数 Date	起重能力 Lifting Capacity (kg)	最小卸料能力 Min.Unloading Capacity(kg)	最小卸料厚板 Min.Unloading Plate Thickness(mm)	最小吸料外形 Min.Holding Material Contour 长(L)×宽(W)(mm)	外形尺寸 overall dimension(mm)					质量 mass (kg)
					A	a	B	H	h	
YX2-0.2	200	20	3	440×185	440	350	185	525	112	50
YX2-0.5	500	50	5	560×275	560	470	275	645	112	80
YX2-1	1000	100	8	720×355	720	540	355	760	165	140
YX2-2	2000	200	10	870×436	870	690	436	905	165	235
YX2-3	3000	500	14	1100×410	1100	950	436	1090	180	410
YX2-5	5000	1500	20	1270×565	1270	1010	565	113	220	640
YX2-10	10000	3000	30	1270×1100	1270	1010	1100	1480	350	1450

主要技术参数(YX 3系列) Main technical data(Series YX 3)

型号 Model / 参数 Date	起重能力 Lifting Capacity (kg)	最小卸料能力 Min.Unloading Capacity(kg)	最小卸料厚板 Min.Unloading Plate Thickness(mm)	最小吸料外形 Min.Holding Material Contour 长(L)×宽(W)(mm)	外形尺寸 overall dimension(mm)				质量 mass (kg)
					A	a	B	H	
YX3-0.5	500	500	4	715×196	716	620	196	460	120
YX3-1	1000	100	5	824×256	824	586	256	570	240
YX3-2	2000	200	8	960×376	960	848	376	600	320
YX3-3	3000	300	12	960×406	960	848	406	680	420

电缆卷筒
Cable Reel

产品简介

我公司在综合国内外技术特点的基础上，自主研发制作了各种形式、各类规格的卷筒，技术先进。广泛应用于起重机。起重电磁铁、电动抓斗、电动平板车、钢包车等电动移动设备上。经多年的现场验证，产品工作稳定，性能可靠，深受广大使用单位一致好评，我公司生产制作的卷筒，按传输方式可分为：电缆卷筒、信号卷筒、软管卷筒(输送气体或液体)按机构型式分为滑环内装式、滑环外装式、悬臂式。按驱动型式可分为：弹簧式、机械外力式、重锤式、力矩电动式、恒张力式、磁耦合式、磁滞式、液力耦合式等。

选型指南

线缆重量较轻、移动距离较短，一般采用弹簧式或恒张力式，电缆重量较重、移动距离较长，一般采用力矩电动式或磁滞式，线缆重量较重，且环境温度过高采用重锤式，电缆较小，移动距离较长，且安装空间小一般采用机械外力式或磁耦合式。

弹力电缆卷筒适用于交流500V以下各种移动电气设备。

电缆的卷取长度以安装方式图中的"L"为准，配备电缆长度分别为：

①方式A为L+3圈。

②方式B为1+h+3圈(其中h值在订货时必须注明)。

③方式C、D中，为L+H+h+3圈。

④方式E、F配备的电缆长度，根据用户现场确定，订货时另行注明。

方式C中卷筒固定在地面，收、放电缆时，电缆与地面存在相对摩擦，此时可在电缆运动轨迹范围内设滚道以减少电缆的磨损。

方式F(悬空卷取)中一般按H=0.14L，H=0.5H考虑，如H<0.14L，h<0.5H时，定货时必须注明H、h值。

电缆卷筒如需装在单梁行车上与电动葫芦配用，可配制特制的滚轮支架部件，以便安装使用。

电缆卷筒上电缆的收、放方向在外型尺寸图中已标明。特殊要求，订货时必须注明。

外型尺寸表中的重量不包括电缆或软管的重量。

如需特殊要求，特殊类型的卷筒，请来人来函共同商议。

Product Introduction

Based on the comprehensive technology characteristics at home and broad, our company independently develops and processes the winding drum in various forms and various specifications with advanced technology, which is widely used for the electric mobile equipment as the crane, hoisting electromagnet, motor grab, fast-p, buggy ladle etc. After many years' site validation, the products are proved to be functioning smoothly and be reliable in performance, which are well received consistent high praise from many units. According to the way of shipping, the winding drum produced and processed by our company could be classified into: cable drum, signal drum, hose reel (for transporting gas or liquid). According to structure, they are classified into: the method with slip installed inside, slip installed outside and that with cantilever type. According to the driving type, they are classified into: the spring type, external mechanical forces, type of counterweight, torque electric, constant tension, JQD, hysteretic, type of fluid coupling etc.

Selection Guide

For cables light in weight and short in moving distance, you can choose the spring or constant tension ones generally; for cables heavy in weight and long in moving distance, you are suggested to choose the torque electric or magnetic hysteresis types; for cables heavy in weight and used in high temperature environment, you'd better choose the hammering type; for small cables with long moving distance and in small installation space, you can choose mechanical external force or magnetic coupling ones.

Elastic cable reel applies for the following mobile electrical equipment under AC 500V.

Coiling length of cables should adopt the" L" way in installation figure, and length of equipped cables is as follows respectively:

① Way A is L+3 ring.

② Way B is 1+h+3 rings (The h value should be specified when ordering)

③ Ways C and way D are all L+H+h+3 rings.

④ The length of cables equipped in E and F should be defined by the user on the spot and specified when ordering.

In way C, as the reel is fixed on the ground, there is relative friction between the cable and the ground. Under such circumstances, a raceway nest could be set within reach of the cable movements to reduce cable wear and tear.

In way F (suspended coiling), it always generally adopts that H = 0.14L and H = 0.5H, for example, if H < 0.14L and H < 0.5H, the H and h values must be marked when ordering.

If the cable reel will be installed on a single beam crane to cooperate with the electric block, special roller bracket components should be prepared so as to facilitate the installation and use.

The roll and expand directions of the cable are marked on the cable reel in the dimension table. Any special requirements must be marked when ordering.

Weight marked in the dimension table does not include the weight of cables or hoses.

For special requirements, please send personnel or letters for discussion about special types of reels.

电缆卷筒
Cable Reel

卷筒安装方式示意图

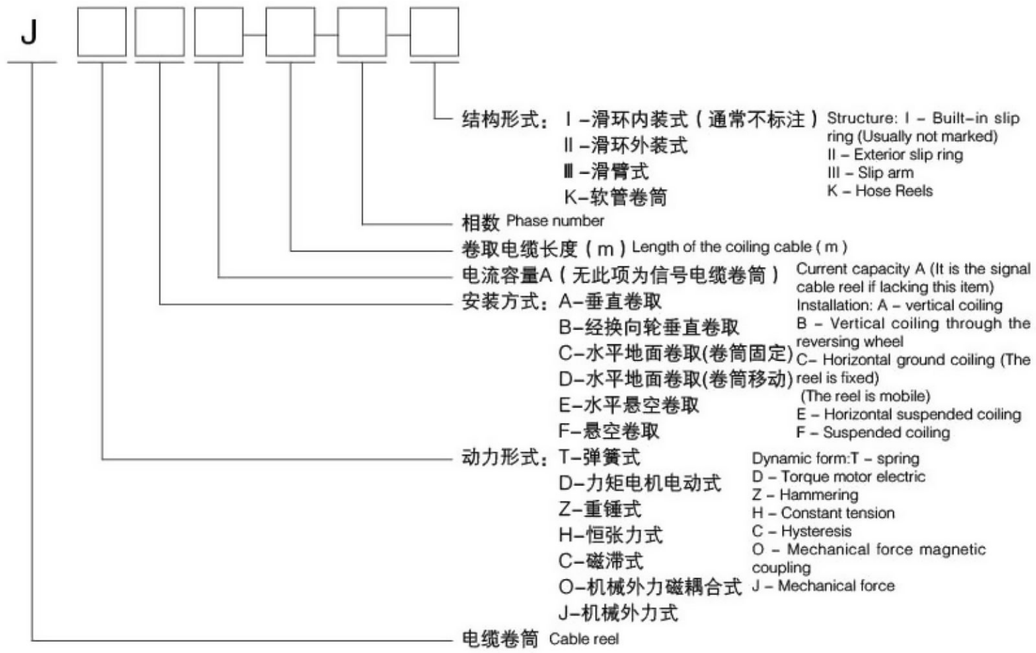

卷筒安装方式示意图 The reel mounting sketch map

方式A垂直卷取

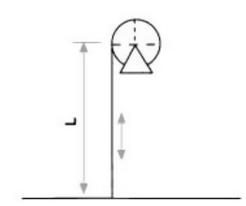

方式B垂直经换向轮卷取

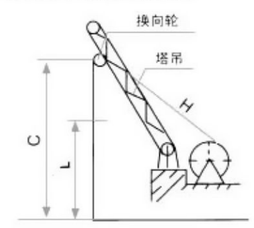

方式c水平地面卷取（卷筒固定）

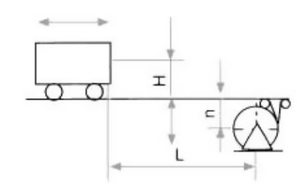

方式d水平地面卷取（卷筒移动）

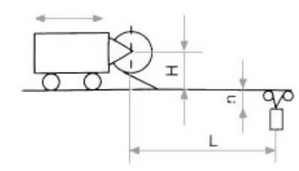

方式E水平悬空卷取

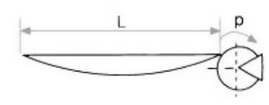

方式F悬空卷取

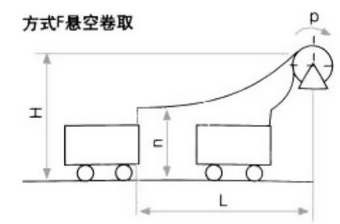

电缆卷筒
Cable Reel

弹簧式卷筒 JT系列 Elastic reel JT series

弹力卷筒是引进国际通用的发条式卷缆技术，以蜗卷弹簧为动力，利用弹簧的储能自动卷取电缆（软管）的机械装置。适用于移动供输的各种场合。主要有滑环内装式、滑环外装式和悬臂式三种规格产品。

工作原理

移动设备移动时，拉动卷筒放出电缆（软管），原放松的蜗卷弹簧亦随绕轴转紧，储存卷取能量，当移动设备返回时，在弹簧反向储能的作用力下自动将电缆（软管）收回卷筒上。

特点

自身不消耗电能，工作可靠。

具有供电简单，操作安全，电缆（软管）受力平和适中、卷放灵活、同步性能好。不容易拉伤电缆。

采用集电滑环碳刷结构传递电能，供电连续、平稳。

设置了可逆转机构，避免卷筒逆转而折断弹簧。

安装简单、维修方便、结构紧凑、外型美观。

Elastic reel is a mechanical device which introduces the international spring cable coiling technique, using the spiral spring as a driving force and the spring storage energy for automatic cable (hose) coiling. It is applicable to various occasions of mobile supply. There are mainly three kinds of product specifications, namely, built-in slip ring, exterior slip ring and cantilever.

Working principle

When moving the mobile equipment, pull the reel and let out the cable (hose). The relaxing spiral spring will rotate to be tight for energy storage. When the mobile device returns, the cable (hose) will be recovered to the reel automatically under the action of reverse storage energy of the spring.

Features:

It can conduct reliable work without consuming electric energy itself.

It has features of simple power supply, safe operation, moderate cable (hose) stress volume, flexible rolling and good synchronous performance. Cables will not be hurt easily when pulling.

It adopts the slip ring carbon brush structure for electrical energy transmitting for continuous and stable power supply.

A reversible rotary mechanism is set to avoid spring broken due to reversal rolling of the reel.

It also has features of simple installation, convenient repairing, compact structure and beautiful appearance.

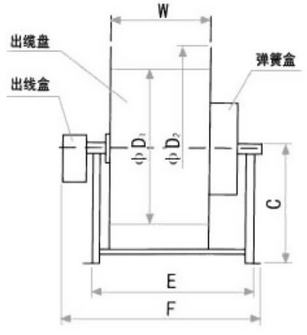

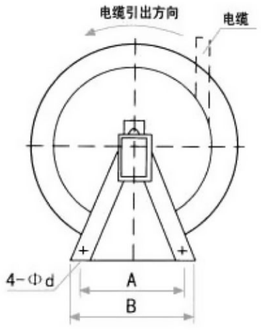

外形尺寸图 Dimensions Figure

主要技术参数 Main technical data

外形序号 Profile number	尺寸 Size	A	B	C	D_1	D_2	d	E	F	W	重量Weight (kg)
10米系列 10-meter series	1	250	300	300	360	500	14	450	600	320	73
	2							485	650	350	78
15米、20米系列 15-meter 20-meter series	1	300	360	400	500	700	15	440	600	250	95
	2							490	650	300	100
	3							560	720	250	115
	4							610	770	300	120
	5							720	880	300	150
25米、30米系列 25-meter 30-meter series	1	400	460	450	600	800	18	525	675	300	120
	2							641	795		150
	3							751	905		180
	4							892	1045		212
	5	500	580	550	800	1000	18	641	795	300	185
	6							751	905		212
	7							892	1045		240
	8							1005	1160		268

电缆卷筒
Cable Reel

主要技术参数 Main technical data

电缆型号规格Cable specifications 芯数×截面（mm^2） Core number × section (mm^2)	允许电流A（40C时）Permissible current A (40C) 连续 Continuous	1分开 1分关 1 turn on 1 turn off	10m 系列 10-meter series	外形序号 Profile number
YC型2×10	58	75	JTA75-10-2	1
YC型2×16	77	100	JTA100-10-2	
YC型 3×6+1×4	35	50	JTA50-10-4	
			JTA50-10-4	
			JTA50-10-4	
			JTA50-10-4	
			JTA50-10-4	
			JTA50-10-4	
CRHF型 7×2.5	12	20	JTA20-10-6	2
			JTA20-10-6	
			JTA20-10-6	
			JTA20-10-6	
			JTA20-10-6	
			JTA20-10-6	

主要技术参数 Main technical data

电缆型号规格 Cable specifications 芯数×截面 Core number × section (mm^2)	允许电流A(40℃时) Permissible current A (40℃) 连续 Continuous	1分开 1分关 1 turn on 1 turn off	15m系列 15-meter series	外形序号 Profile number	20m系列 20-meter series	外形序号 Profile number	25m系列 25-meter series	外形序号 Profile number	30m系列 30-meter series	外形序号 Profile number
YC型2×6	40	50	/	/	/	/	JTA50-25-2	1	/	/
			/	/	/	/	JTB50-25-2		/	/
YC型2×10	58	75	JTA75-15-2	1	JTA75-20-2	1	JTA75-25-2	2	JTA75-30-2	6
			JTB75-15-2		JTB75-20-2		JTB75-25-2		JTB75-30-2	
YC型2×16	77	100	JTA100-15-2	1	JTA10-20-2	3	JTA100-25-2	2	JTA100-30-2	6
			JTB100-15-2		JTB10-20-2		JTB100-25-2		JTB100-30-2	
YC型2×25	106	135	JTA135-15-2	4	JTA135-20-2	4	JTA135-25-2	3	JTA135-30-2	8
			JTB135-15-2		JTB135-20-2		JTB135-25-2		JTB135-30-2	
YC型2×35	132	170	JTA170-15-2	4	JTA170-20-2	5	JTA170-25-2	4	/	/
			JTB170-15-2		JTB170-20-2		JTB170-25-2		/	
YC型 3×6+1×4	35	50	JTA50-15-4	2	JTA50-20-4	2	JTA50-25-4	2	JTA50-30-4	5
			JTB50-15-4		JTB50-20-4		JTB50-25-4		JTB50-30-4	
			JTC50-15-4		JTC50-20-4		JTC50-25-4	1	JTC50-30-4	
			JTD50-15-4		JTD50-20-4		JTD50-25-4		JTD50-30-4	
			JTE50-15-4		/	/	JTE50-25-4	2	/	6
			JTF50-15-4		/		JTF50-25-4		/	
YC型 3×10+1×6	50	65	JTA65-15-4	2	JTA65-20-4	4	JTA65-25-4	2	JTA65-30-4	6
			JTB65-15-4		JTB65-20-4		JTB65-25-4		JTB65-30-4	
			JTC65-15-4		JTC65-20-4	2	JTC65-25-4	1	JTC65-30-4	5
			JTD65-15-4		JTD65-20-4		JTD65-25-4		JTD65-30-4	
			JTE65-15-4	4	JTE65-20-4	4	JTE65-25-4	3	JTE65-30-4	7
			JTF65-15-4		JTF65-20-4		JTF65-25-4		JTF65-30-4	
YC型 3×16+1×6	66	85	JTA85-15-4	4	JTA85-20-4	4	JTA85-25-4	3	JTA85-30-4	7
			JTB85-15-4		JTB85-20-4		JTB85-25-4		JTB85-30-4	
			JTC85-15-4	2	JTC85-20-4	2	JTC85-25-4	2	JTC85-30-4	6
			JTD85-15-4		JTD85-20-4		JTD85-25-4		JTD85-30-4	5
			JTE80-15-4	4	JTE80-20-4	4	JTE80-25-4	4	/	/
			JTF85-15-4		JTF85-20-4	5	JTF85-25-4		/	
CRHF型 20×2.5	12	20	JTA20-15-20	4	JTA20-20-20	4	JTA20-25-20		/	/
			JTB20-15-20		JTB20-20-20		JTB20-25-20		/	
			JTC20-15-20	2	JTC20-20-20	2	JTC20-25-20	2	JTC20-30-20	4
			JTD20-15-20		JTD20-20-20		JTD20-25-20		JTD20-30-20	
			JTE20-15-20	4	JTE20-20-20	4	/	/	/	/
			JTF20-15-20		JTF20-20-20		/		/	

电缆卷筒
Cable Reel

滑环外装式电缆卷筒 JT系列
Cable reel of exterior slip ring JT series

外形尺寸图 Dimensions Figure

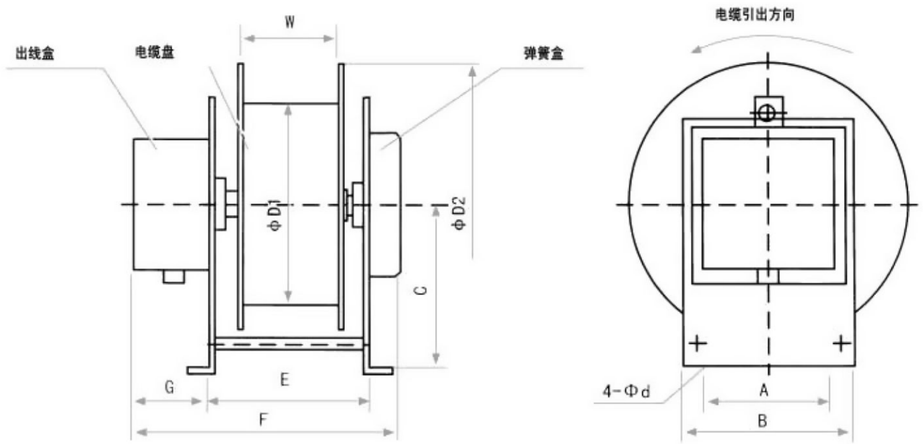

主要技术参数 Main technical data

外形序号 Profile number	尺寸 Size	A	B	C	D_1	D_2	d	E	F	G	W	重量 Weight (kg)
15米、20米系列 15-meter 20-meter series	1	310	360	400	500	700	15	420	710	190	250	140
	2								825			170
	3							470	990		300	220
	4							420	785	265	250	155
	5								900			185
25米、30米系列 25-meter 30-meter series	1	310	360	450	600	800	18	420	710	190	250	190
	2								825		250	220
	3							470	990		300	250
	4								1105		300	280
	5							420	900	265	250	195
	6	310	360	550	800	1000	15	420	825	190	250	250
	7							470	990	190	300	290
	8								1105			300
	9								1220			330
	10								1075	265		235
	11							420	900	265	250	210

电缆卷筒
Cable Reel

主要技术参数 Main technical data

电缆型号规格 Cable specifications	允许电流 A(40℃时) Permissible current A (40℃)		15m系列 15-meter series	外形序号 Profile number	20m系列 20-meter series	外形序号 Profile number	25m系列 25-meter series	外形序号 Profile number	30m系列 30-meter series	外形序号 Profile number
芯数×截面 Core number × section (mm²)	连续 Continuous	1分开 1分关 1 turn on 1 turn off								
YC型2×6	40	50	/	/	/	/	JTA50-25-2-Ⅱ	1	/	/
			/	/	/	/	JTB50-25-2-Ⅱ		/	
YC型2×10	58	75	JTA75-15-2-Ⅱ	1	JTA75-20-2-Ⅱ	1	JTA75-25-2-Ⅱ	2	JTA75-30-2-Ⅱ	7
			JTB75-15-2-Ⅱ		JTB75-20-2-Ⅱ		JTB75-25-2-Ⅱ		JTB75-30-2-Ⅱ	
YC型2×16	77	100	JTA10-15-2-Ⅱ	1	JTA100-20-2-Ⅱ	2	JTA100-25-2-Ⅱ	2	JTA100-30-2-Ⅱ	7
			JTB10-15-2-Ⅱ		JTB100-20-2-Ⅱ		JTB100-25-2-Ⅱ		JTB100-30-2-Ⅱ	
YC型2×25	106	135	JTA135-15-2-Ⅱ	2	JTA135-20-2-Ⅱ	2	JTA135-25-2-Ⅱ	3	JTA135-30-2-Ⅱ	0
			JTB135-15-2-Ⅱ		JTB135-20-2-Ⅱ		JTB135-25-2-Ⅱ		JTB135-30-2-Ⅱ	
YC型2×35	132	170	JTA170-15-2-Ⅱ	2	JTA170-20-2-Ⅱ	3	JTA170-25-2-Ⅱ	4	/	/
			JTB170-15-2-Ⅱ		JTB170-20-2-Ⅱ		JTB170-25-2-Ⅱ		/	
YC型 3×6+1×4	35	50	JTA50-15-4-Ⅱ	1	JTA50-20-4-Ⅱ	1	JTA50-25-4-Ⅱ	2	JTA50-30-4-Ⅱ	6
			JTB50-15-4-Ⅱ		JTB50-20-4-Ⅱ		JTB50-25-4-Ⅱ		JTB50-30-4-Ⅱ	
			JTC50-15-4-Ⅱ		JTC50-20-4-Ⅱ		JTC50-25-4-Ⅱ	1	JTC50-30-4-Ⅱ	
			JTD50-15-4-Ⅱ		JTD50-20-4-Ⅱ		JTD50-25-4-Ⅱ		JTD50-30-4-Ⅱ	
			JTE50-15-4-Ⅱ		/	/	JTE50-25-4-Ⅱ	2	/	7
			JTF50-15-4-Ⅱ		/		JTF50-25-4-Ⅱ		/	
YC型 3×10+1×6	50	65	JTA65-15-4-Ⅱ	1	JTA65-20-4-Ⅱ	2	JTA65-25-4-Ⅱ	2	JTA65-30-4-Ⅱ	7
			JTB65-15-4-Ⅱ		JTB65-20-4-Ⅱ		JTB65-25-4-Ⅱ		JTB65-30-4-Ⅱ	
			JTC65-15-4-Ⅱ		JTC65-20-4-Ⅱ	1	JTC65-25-4-Ⅱ	1	JTC65-30-4-Ⅱ	6
			JTD65-15-4-Ⅱ		JTD65-20-4-Ⅱ		JTD65-25-4-Ⅱ		JTD65-30-4-Ⅱ	
			JTE65-15-4-Ⅱ	2	JTE65-20-4-Ⅱ	2	JTE65-25-4-Ⅱ	3	JTE65-30-4-Ⅱ	8
			JTF65-15-4-Ⅱ		JTF65-20-4-Ⅱ		JTF65-25-4-Ⅱ		JTF65-30-4-Ⅱ	
YC型 3×16+1×6	66	85	JTA85-15-4-Ⅱ	2	JTA85-20-4-Ⅱ	2	JTA85-25-4-Ⅱ	3	JTA85-30-4-Ⅱ	8
			JTB85-15-4-Ⅱ		JTB85-20-4-Ⅱ		JTB85-25-4-Ⅱ		JTB85-30-4-Ⅱ	
			JTC85-15-4-Ⅱ	1	JTC85-20-4-Ⅱ	1	JTC85-25-4-Ⅱ	2	JTC85-30-4-Ⅱ	7
			JTD85-15-4-Ⅱ		JTD85-20-4-Ⅱ		JTD85-25-4-Ⅱ		JTD85-30-4-Ⅱ	6
			JTE85-15-4-Ⅱ	2	JTE85-20-4-Ⅱ	2	JTE85-25-4-Ⅱ	4	/	/
			JTF85-15-4-Ⅱ		JTF85-20-4-Ⅱ	3	JTF85-25-4-Ⅱ		/	
YC型 3×25+1×10	91	120	JTA120-15-4-Ⅱ	2	JTA120-20-4-Ⅱ	3	JTA120-25-4-Ⅱ	4	/	7
			JTB120-15-4-Ⅱ		JTB120-20-4-Ⅱ		JTB120-25-4-Ⅱ		/	
			JTC120-15-4-Ⅱ		JTC120-20-4-Ⅱ	2	JTC120-25-4-Ⅱ	2	JTC120-30-4-Ⅱ	
			JTD120-15-4-Ⅱ		JTD120-20-4-Ⅱ		JTD120-25-4-Ⅱ		JTD120-30-4-Ⅱ	
			JTE120-15-4-Ⅱ	3	/	/	/	/	/	/
			JTF120-15-4-Ⅱ		/		/		/	
YC型 10×2.5	12	20	JTA20-15-8-Ⅱ	4	JTA20-20-8-Ⅱ	5	JTA20-25-8-Ⅱ	5	JTA20-30-8-Ⅱ	10
			JTB20-15-8-Ⅱ		JTB20-20-8-Ⅱ		JTB20-25-8-Ⅱ		JTB20-30-8-Ⅱ	
			JTC20-15-8-Ⅱ		JTC20-20-8-Ⅱ		JTC20-25-8-Ⅱ		JTC20-30-8-Ⅱ	11
			JTD20-15-8-Ⅱ		JTD20-20-8-Ⅱ		JTD20-25-8-Ⅱ		JTD20-30-8-Ⅱ	
			JTE20-15-8-Ⅱ	5	JTE20-20-8-Ⅱ		/	/	/	/
			JTF20-15-8-Ⅱ		JTF20-20-8-Ⅱ		/	/	/	/

电缆卷筒
Cable Reel

水平地面卷取电缆卷筒 JT系列
Horizontal ground coiling cable reel JT series

外形尺寸图 Dimensions Figure

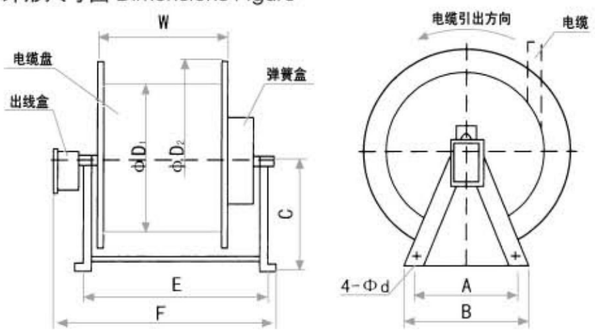

选型及注意事项
本系列卷筒仅适用于D–水平安装方式，即卷筒安装在移动设备上。
50米系列以上的（含50米）电缆用户自备。

Selection and notes
This series of reel applies only to the D – horizontal installation method, namely, the reel is mounted on a mobile device.
Cable series above 50 meters (including 50 meters) should be provided by the customer.

主要技术参数 Main technical data

外形序号 Profile number / 尺寸 Size	A	B	C	D_1	D_2	d	E	F	W	重量 Weight (kg)
1	250	300	300	360	500	14	504	670	320	88
2	300	360	400	500	700	15	610	760	425	143
3	400	460	450	600	800	18	643	800	500	162
4	500	580	500	800	1000	18	835	990	690	236
5	300	360	400	500	700	15	710	860	525	155

主要技术参数 Main technical data

电缆型号规格 Cable specifications	允许电流 A(40℃时) Permissible current A (40℃)		20cm系列 20cm series	外形序号 Profile number	40cm系列 40cm series	外形序号 Profile number	50cm系列 50cm series	外形序号 Profile number	100cm系列 100cm series	外形序号 Profile number
芯数×截面 Core number × section (mm)	连续 Continuous	1分开 1分关 1 turn on 1 turn off								
YC型3×6+1×4	35	50	JTD50–20–4	1	JTD50–40–4		JTD50–50–4		/	/
YC型3×10+1×6	50	65	/	/	JTD65–40–4	5	JTD65–50–4	3	JTD65–100–4	4
YC型3×16+1×6	66	85	/	/	JTD85–40–4		JTD85–50–4		/	/
YC型8×6	35	50	/	/	JTD–40–8	5	/	/	/	/

电缆卷筒
Cable Reel

悬臂式电缆卷筒 JT系列
Cantilever cable reel JT series

外形尺寸图 Dimensions Figure

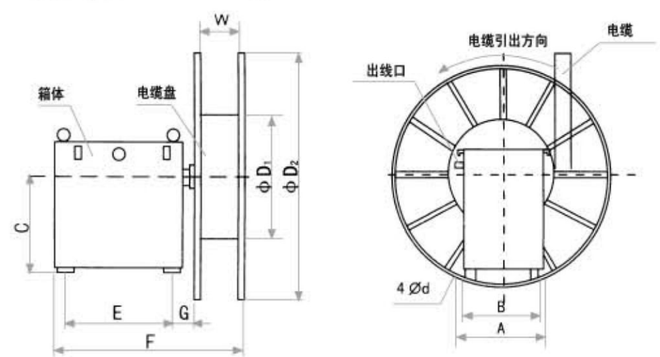

外形尺寸图 Dimensions Figure

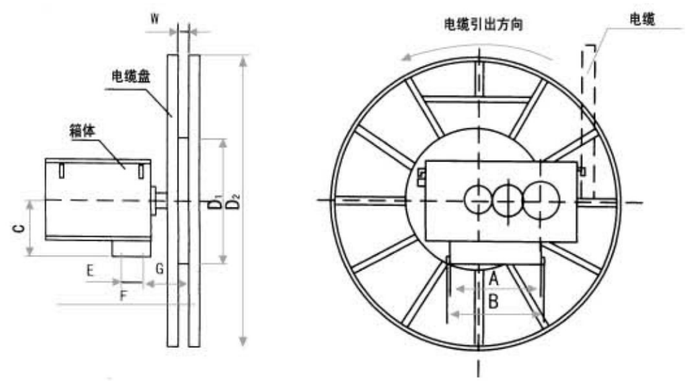

主要技术参数 Main technical data

外形序号 Profile number / 尺寸 Size	A	B	C	D_1	D_2	d	E	F	G	W	重量 Weight (kg)
1				600	1000						300
2	410	450	462		1300	18	520	18			360
3				800					105	250	380
4	780	820	470		1600	22		22			500
5	420	460	270		1800(1500)	18	100	18	200	60(200)	400

电缆卷筒
Cable Reel

主要技术参数 Main technical data

电缆型号规格 Cable specifications	允许电流A(40℃时) Permissible current A (40℃)		30cm系列 30cm series	外形序号 Profile number	50cm系列 50cm series	外形序号 Profile number	100cm系列 100cm series	外形序号 Profile number	150cm系列 150cm series	外形序号 Profile number
芯数×截面 Core number × section (mm)	连续 Continuous	1分开1分关 1 turn on 1 turn off								
UC型3×10+1×6	50	65	JTC65-30-4-III	1	JTC65-50-4-III	1	JTC65-100-4-III	1	/	2
			JTD65-30-4-III		JTD65-50-4-III		JTD65-100-4-III		JTD65-150-4-III	
			JTF65-30-4-III		JTF65-50-4-III		/		/	
UC型3×16+1×6	66	85	JTC85-30-4-III	1	JTC85-50-4-III	2	JTC85-100-4-III	2	/	2
			JTD85-30-4-III		JTD85-50-4-III		JTD85-100-4-III		JTD85-150-4-III	
			JTF85-30-4-III		JTF85-50-4-III	4	/		/	
UC型3×25+1×6	91	125	JTC125-30-4-III	2	JTC125-50-4-III	3	/	2	/	
			JTD125-30-4-III		JTD125-50-4-III		JTD125-100-4-III		/	
			JTF125-30-4-III		JTF125-50-4-III	4	/		/	
UC型3×35+1×6	113	150	JTC150-30-4-III	3	JTC150-50-4-III	3	/	3	/	
			JTD150-30-4-III		JTD150-50-4-III		JTD150-100-4-III		/	
			JTF150-30-4-III		JTF150-50-4-III	4	/	/	/	
UC型3×50+1×6	140	190	JTC190-30-4-III	3	JTC190-50-4-III	3	/	/	/	
			JTD190-30-4-III		JTD190-50-4-III		/		/	
			JTF190-30-4-III		JTF190-50-4-III	4	/		/	
CRHF50×2.5	12	20	JTC20-30-50-III	2		3	/	/	/	
			JTD20-30-50-III	5	JTD20-50-50-III	5	/		/	

力矩电机电动式卷筒 JD系列 Torque motor electric reel JD series

JD系列电动卷筒是以力矩电机为动力，卷取力大。适用于电缆(软管)较重移动距离较长的工况。
主要分为低压、高压、立式、卧式等规格产品。

工作原理

移动设备移动时，拉动卷筒放出电缆(软管)，此时移动设备对卷筒施加外拉力加电缆的自坠力大于力矩电机的扭力，力矩电机堵转，没有起到卷取电缆(软管)的作用，只保持其卷筒对电缆(软管)的张力。当移动设备返回时，外拉力消除，电缆(软管)的自坠力小于力矩电机的扭力，力矩电机起到卷取的作用，电缆(软管)收回卷筒上。

特点

卷取力大，可以卷取大规格长距离的供输电缆(气管)。
力矩电机堵转时间长，电机使用寿命长，工作可靠。
设置力矩调节及连锁控制装置。卷取力度调节方便，收放同步灵活。
采用集电滑环碳刷结构传递电能，供电连续。平稳。
卷筒设置反向运转，更换电缆方便。

JD series of electric reel takes torque motor as the motive power, which is of strong rolling force. They are applied to working conditions of heavy cable (hose) and long moving distance.

The product specifications are mainly divided into low pressure, high pressure, vertical and horizontal types.

Working principle

When moving the mobile equipment mobile, pull the reel and let out the cable (hose). At this time, the tension of the reel made by the mobile device and the falling force of the cable is greater than the torque of the motor torque, and the torque motor will be stalled, failing to coil the cable (hose), only to maintain the reel' s tension for the cable (hose). When the mobile device returns, the external tension is eliminated, and since the falling force of the cable (hose) is less than the torque of the motor torque, the torque motor will act as the rolling force to recover the cable (hose) to the reel.

Features:

It has a strong coiling power which can coil the transmission cable (pipe) of large size and long distance.

The torque motor has a long stalling time and also enjoys long service life with reliable work.

The torque regulation and interlock control device is set to facilitate coiling strength adjustment and both the rolling and extending is flexible and synchronous.

It adopts the slip ring carbon brush structure for electrical energy transmitting for continuous and stable power supply.

The reel is set for reverse operation which can facilitate replacement of cables.

电缆卷筒
Cable Reel

低压力矩电机电动式电缆卷筒 JD系列
Low-voltage torque motor electric Cable drum JD series

外形尺寸图 Dimensions Figure

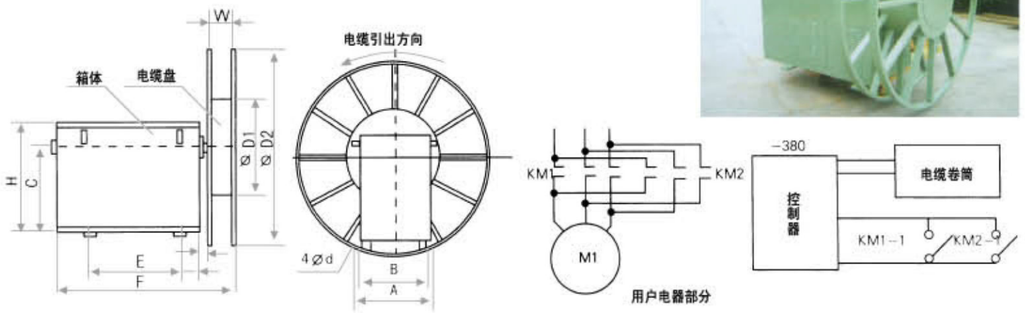

注：M1为运行设备行走电机　KM1、KM2为正反转接触器　KM1-1、KM2-2常开触头
Note: M1 is the operating equipment walking motor　KM1, KM2 are the positive and reverse contactor.
KM1-1, KM2-2 are the normal open contact.

外形序号 Profile number / 尺寸 Size	A	B	C	D_1	D_2	d	E	F	H	I	K	W	重量 Weight (kg)
1	665	575	625	800	1300	26	750	1450	805	80	60	250	830
2					1600								840
3					1600								860
4				1500	1800			1490				300	930
5					2000								980
6					2400								1000

主要技术参数 Main technical data

电缆型号规格 Cable specifications	允许电流A(40℃时) Permissible current A (40℃)		50m系列 50-meter series	外形序号 Profile number	60m系列 60-meter series	外形序号 Profile number	70m系列 70-meter series	外形序号 Profile number	80m系列 80-meter series	外形序号 Profile number
芯数×截面 Core number × section (mm^2)	连续 Continuous	1分开1分关 1 turn on 1 turn off								
YC型 3×25+1×10	90	120	/		JDD90-100-4	3	JDD90-150-4	4	JDD90-200-4	4
YC型 3×35+1×10	110	150	/		JDD110-100-4		JDD110-150-4		JDD110-200-4	
YC型 3×50+1×16	140	180	JTD140-50-4		JDD140-100-4	3	JDD140-150-4	4	JDD140-200-4	5
YC型 3×70+1×25	180	220	JTD180-50-4		JDD180-100-4		JDD180-150-4		JDD180-200-4	
YC型 3×95+1×35	210	270	JTD210-50-4		JDD210-100-4	4	JDD210-150-4	5	JDD210-200-4	6
YC型 3×120+1×35	250	320	JTD250-50-4		JDD250-100-4		JDD250-150-4		JDD250-200-4	

注：电缆用户自备
Note: The cable should be equipped by the user.

电缆卷筒
Cable Reel

高压力矩电机电动式电缆卷筒 JD系列
High-voltage torque motor electric Cable drum JD series

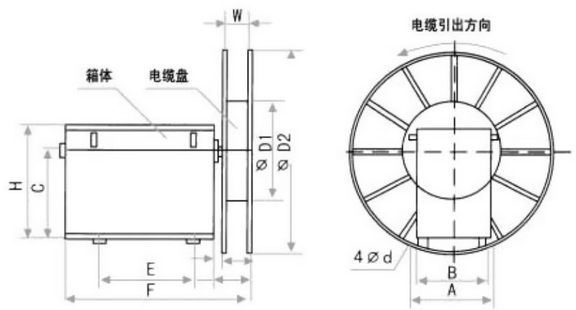

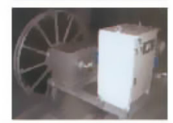

注：电气联接图同前页，电控一般由用户自备。

外形尺寸图 Dimensions Figure

外形序号 Profile number / 尺寸 Size	A	B	C	D_1	D_2	d	E	F	H	I	K	W	重量 Weight (kg)
1	880	800	910	1000	1600	26	600	1800	1370	100	110	250	960
2	880	800	910	1000	1800	26	600	1800	1370	100	110	250	980
3	880	800	910	1000	2000	26	600	1800	1370	100	110	250	1010
4	880	800	910	1200	2500	26	600	1800	1370	100	110	250	1080
5	880	800	1000	1000	1800	26	600	1900	1460	100	110	250	1150
6	880	800	1000	1500	2500	26	600	1900	1460	100	110	250	1250

主要技术参数 Main technical data

电缆型号规格 Cable specifications	允许电流 A(40℃时) Permissible current A (40℃)		50m系列 50-meter series	外形序号 Profile number	60m系列 60-meter series	外形序号 Profile number	70m系列 70-meter series	外形序号 Profile number	80m系列 80-meter series	外形序号 Profile number
芯数×截面 Core number × section (mm)	连续 Continuous	1分开 1分关 1 turn on 1 turn off								
UG-6000 3×16+1×10	65	85	/		JDD65-100-4G	2	JDD65-150-4G	3	JDD65-200-4G	4
UG-6000 3×25+1×16	90	120	JDD90-50-4G	1	JDD90-100-4G	2	JDD90-150-4G	3	JDD90-200-4G	4
UG-6000 3×35+1×16	110	150	JDD110-50-4G	1	JDD110-100-4G	2	JDD110-150-4G	3	JDD110-200-4G	4
UG-6000 3×25+1×16	90	120	/		JDD90-100-4G	5	/	/	JDD90-200-4GG	6

注：1.电缆用户自备。 2.选用扁电缆时，电缆盘需变化。 3.G表示6KV高压卷筒。GG表示100KV高压卷筒。

Note: 1. The cable should be equipped by the user.
2. When use the flat cable, the cable hank need to be changed.
3. G represents 6KV high-voltage winding drum. GG represents 100KV high-voltage winding drum.

电缆卷筒
Cable Reel

磁滞式电缆卷筒 JC系列
Hysteresis type cable drum JC series

JC系列电磁滞式电缆卷筒与JH系列卷筒一样，也是一种电动恒力矩卷筒。不过磁滞卷筒可以增加驱动头数，以满足卷取大规格的现场需要。主要适用于龙门吊、门座起重机、装船机等大型起重设备。

特点

卷取力大，可以卷取大规格长距离的供电电缆。
各驱动头力矩可调，并且还可以增减驱动头数达到最佳的卷取力矩。
卷力恒定、电缆受力平和、同步性能好。

The electromagnetic belt cable drum of JC series is same with the winding drum of JH series, and is also a kind of electric constant torque winding drum. However, the hysteresis winding drum may increase the number of the drive heads to meet the need of coiling the large size. It mainly applied to the gantry cranes, portal cranes, ship loader and other large lifting equipments.

Feature:

The coiling force is large, and can coil the power supply cable with large size and long distance.

The torque of each drive head can be adjustable, and it can increase and decrease the number of drive heads to meet the best coiling torque.

The coiling torque is constant, the cable force is gentle, and the synchronization performance is good.

外形尺寸图 Dimensions Figure

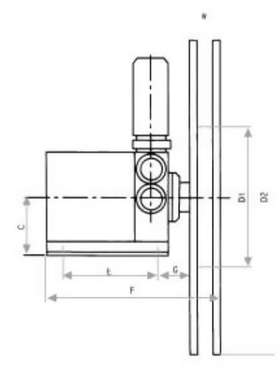

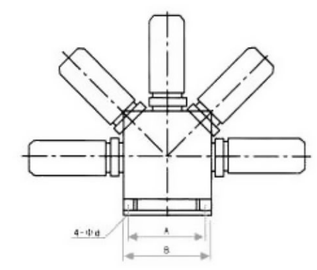

外形尺寸图 Dimensions Figure

外形序号 Profile number / 尺寸 Size	A	B	C	D_1	D_2	d	E	F	G	W
JCD150Ⅰ-100-4	400	450	350		2500	22	550	850	80	80
JCD220Ⅱ-100-4				800	3000			900	80	60
JCD360Ⅲ-100-4				1000	3200			920	80	70
JCD500Ⅳ-100-4					3500			1000	80	85
JCD580Ⅴ-100-4				1200	4000			1100	80	100

注：电缆用户自备。 Note: The cable should be equipped by the user.

电控设备
Electronic control equipment

起重电磁铁电控方式的选定
Selection of lifting electromagnet electric control mode

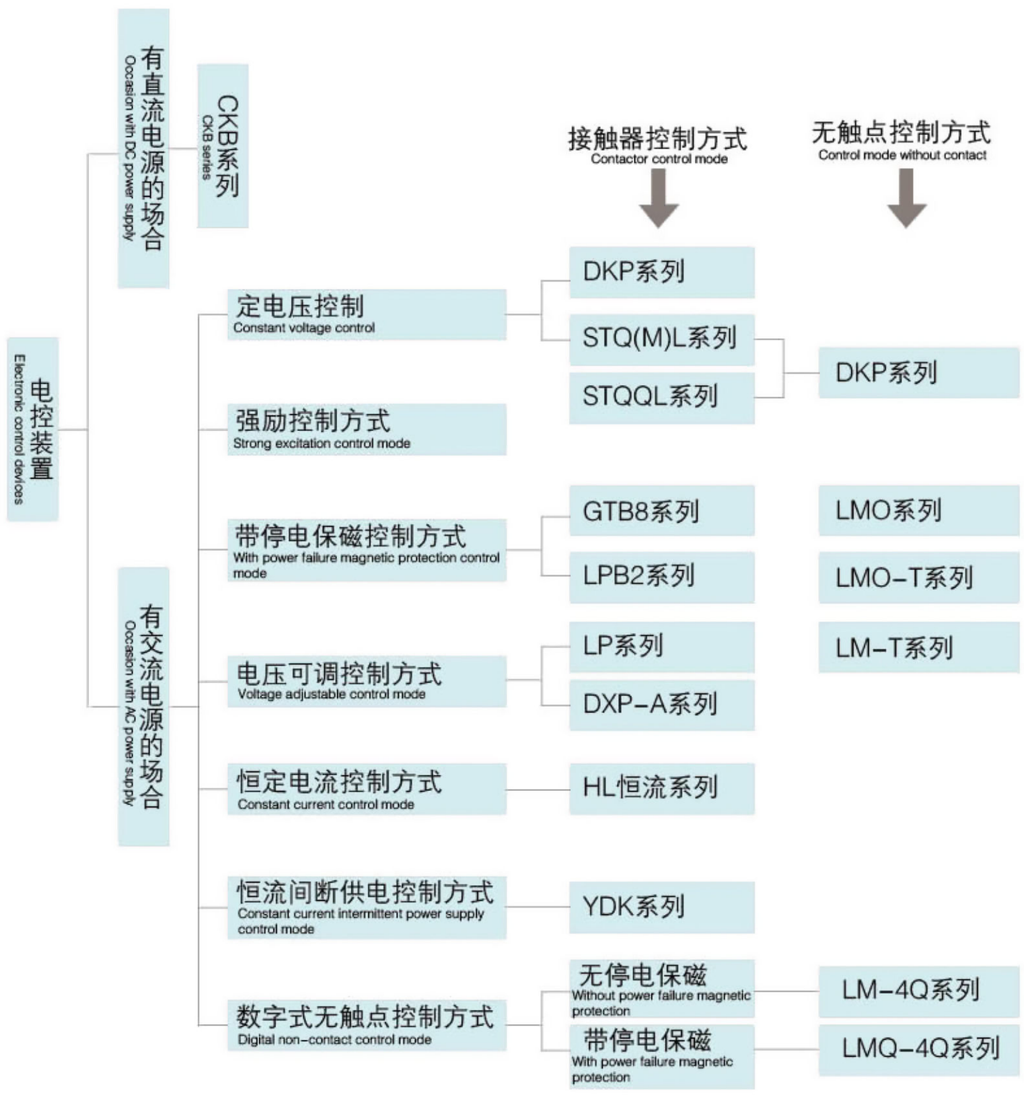

电控设备
Electronic control equipment

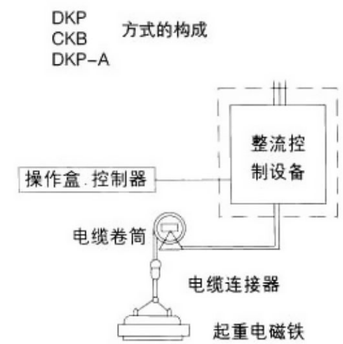

STQOL方式的构成

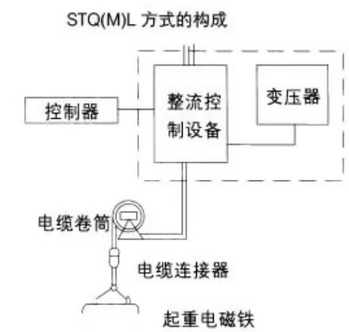

GTB6.GTB1方式的构成

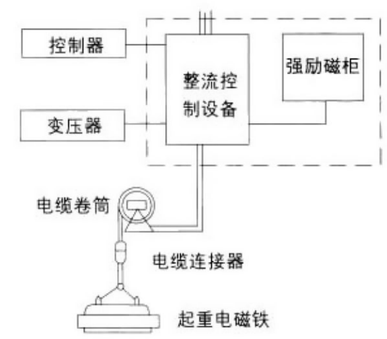

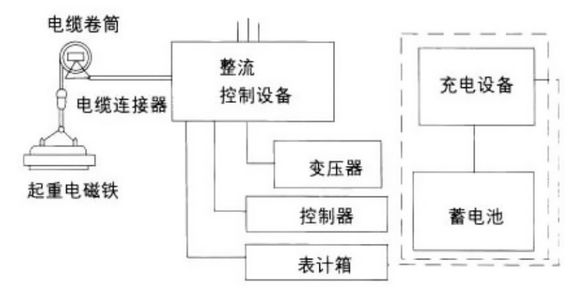

整流控制设备 DKP系列
Rectifier control equipment DKP series

特点

本系列产品采用三线二相半波整流方式，具有线路简单、体积小、重量轻等特点，适合与MW5、MW22系列电磁铁配套使用。

Feature:
The products of this series use three-wire two-phase and half-wave rectification mode, have the features of simple wire, small size, light weight and other features, and are suitable for using with the electromagnet of MW5, MW22 series.

型号说明 Model discription

DKP—□

规格代号 Specification code
1.为输出电流20A 1. The output current is 20A
3.为输出电流40A 3. The output current is 40A
4.为输出电流100A 4. The output current is 100A

低压整流控制设备 Low-voltage rectifier control equipment

电控设备
Electronic control equipment

安装尺寸图 Installation dimensions

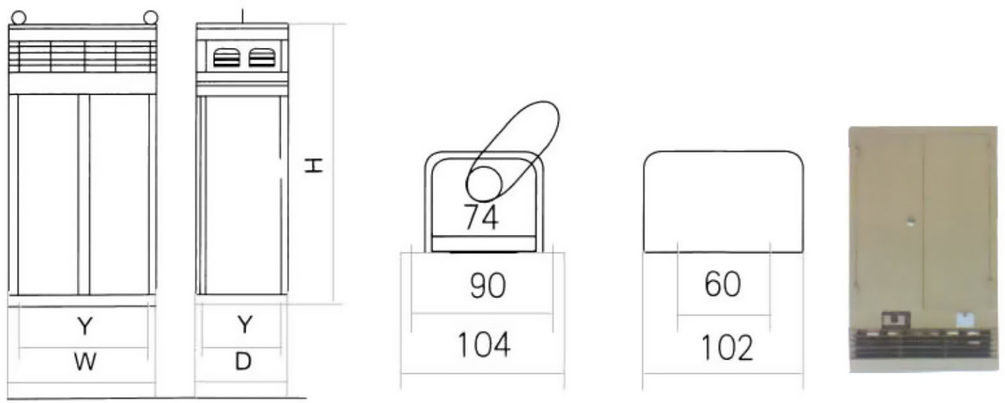

控制柜　　控制柜

主要技术参数 Main technical data

型号 Model / 主要参数 main parameters	电源相数 Power phase	输入交流电压（V） AC input voltage	输入直流电压（V） DC input voltage	额定输出电流（A） Rated output current
DKP-1	三相	380	220	20
DPK-3	三相	380	220	40
DPK-4	三相	380	220	100

设备成套性 Set feature of the equipment

主要参数 main parameters		数量 Quantity			外形及安装参考尺寸（mm） Shape and install the reference dimension						安装孔 Mounting holes	单台重量（kg） weight
名称 Name	型号 Model	DKP-1	DPK-3	DPK-4	W	D	H	X	Y	C		
整流控制设备 Control equipment	DKP-1	1			650	400	1150	580	340	68	4-Φ10	83
	DPK-3		1									83
	DPK-4			1	650	400	1150	580	340	68		110
操控盒 Manipulation box	K03-15T	1			/	/	/	/	/	/	4-Φ8	25

选型及注意事项

电磁铁的额定电压与整流控制设备的输出电压相符。
电磁铁的额定电流应小于或等于整流控制设备的额定输出电流。

Selection and notes
Rated voltage of the electromagnet is consistent with the output voltage of the rectifier control equipment.
The rated current of the electromagnet should be less or equal to the rated output current of the rectifier control equipment.

电控设备
Electronic control equipment

整流控制设备 DKP-A系列
Rectifier control equipment DKP-A series

概述

DKP-A系列产品是在DKP系列产品的基础上改进设计的，当电网电压偏低或偏高时，调节电位器，改变可控硅的导通角，可使输出电压在170~240伏范围内调整，从而输出电压基本接近电磁铁的额定电压220伏。适合与MW5、MW22系列电磁铁配套使用。

Profile
The products of DKP-A series are improved and designed on the base of DKP series products. When the voltage of the power grid is lower or higher, adjust the potentiometer to change the conduction angle of silicon controlled rectifier, make the output voltage be adjusted in the range of 170~240V, and make the output voltage be close to the rated voltage 220V of the electromagnet. It is suitable for using with the electromagnet of MW5, MW22 series.

型号说明 Model discription

DKP—□ A

- A：改进型 Improved model
- □：规格代号 Specification code
  - 1.为输出电流20A　1. The output current is 20A
  - 3.为输出电流40A　3. The output current is 40A
  - 4.为输出电流100A　4. The output current is 100A
- DKP：低压整流控制设备 Low-voltage rectifier control equipment

主要技术参数 Main technical data

型号 Model / 主要参数 main parameters	电源相数 Power phase	输入交流电压（V） AC input voltage	输入直流电压（V） DC input voltage	额定输出电流（A） Rated output current
DKP-1	三相	380	170～220	20
DKP-3	三相	380	170～220	40
DKP-4	三相	380	170～220	100

设备成套性 Set feature of the equipment

配套设备 Equipment		数量 Quantity			外形及安装参考尺寸（mm） Shape and install the reference dimension					安装孔 Mounting holes	单台重量（kg） weight
名称 Name	型号 Model	DKP-1	DKP-3	DKP-4	W	D	H	X	Y		
整流控制设备 Control equipment	DKP-1	1			650	400	1150	580	340	4-Φ10	83
	DKP-3		1								83
	DKP-4			1	650	400	1150	580	340		110
操控盒 Manipulation box	K03-15T	1								4-Φ6	0.5

外形尺寸图　同DKP系列 The appearance dimension drawing is same with DKP series.

选型及注意事项

电磁铁的额定电压与整流控制设备的输出电压相符。
电磁铁的额定电流应小于或等于整流控制设备的额定输出电流。

Selection and notes
Rated voltage of the electromagnet is consistent with the output voltage of the rectifier control equipment.
The rated current of the electromagnet should be less or equal to the rated output current of the rectifier control equipment.

电控设备
Electronic control equipment

整流控制设备 STQ（M）L系列
Rectifier control equipment STQ (M) L series

概述

该系列产品经变压器通过桥式整流组件，获得直流220伏电压，整个设备由自动空气开关、变压器、桥式整流组件、直流接触器等主要部件组成。电路设备有短路、过电压等保护措施，当受控电磁铁容量小于或等于9千瓦时，采用单相桥式整流方式。

Profile

The products of this series shall obtain the DC 220V voltage by the transformer through the bridge rectifier components, and the entire equipment is composed of the automatic air switch, transformer, bridge rectifier components, DC contactor and other main components. The circuit equipments have the short circuit, over voltage and other protection measures. When the controlled electromagnet capacity is less than or equal to 9 kwh, use the single-phase bridge rectifier way.

型号说明 Model discription

STQ(M)L－□E－□

- C为户内式 C is indoor type and
- D为户外式 D is outdoor type
- 带放电回路方式 Circuit mode with discharge
- 额定输出功率 Rated output power
- 带控制回路式 With control circuit mode
- Q为三相380伏 Q is the 3-phase 380V
- M为单相380伏 M is the single-phase 380V
- 二极管整流方式 Diode rectification mode

主要技术参数 Main technical data

型号 Model \ 主要参数 main parameters	电源相数 Power phase	输入交流电压（V） AC input voltage	输入直流电压（V） DC input voltage	额定输出电流（A） Rated output current
STML-3E-C	三相	380	110	3
STML-4E-C	三相	380	220	4
STML-7E-C	三相	380	220	7
STML-9E-C	三相	380	220	9
STQL-14E-C	三相	380	220	14
STQL-19E-C	三相	380	220	19
STQL-25E-C	三相	380	220	25
STQL-32E-C	三相	380	220	32
STQL-38E-C	三相	380	220	38

选型及注意事项

电磁铁的额定电压与流控制设备的输出电压相符。

电磁铁的额定电流应小于或等于整流控制设备的额定输出功率。

整流控制设备在周围环境温度超过40℃时，请用户订货时特别声明。

户外式整流控制设备外形和安装尺寸另行提供。

3E以下为110V，如需3E以下时请用户订货时特别声明。

Slection and notes

Rated voltage of the electromagnet is consistent with the output voltage of the rectifier control equipment.

The rated current of the electromagnet should be less or equal to the rated output current of the rectifier control equipment.

When the ambient temperature of the rectifier equipment exceeds 40℃, the user should make the special statement when order the equipments.

The appearance and installation dimensions of the outdoor rectifier control equipment should be available separately.

The blow 3E are 110V, if need the blow 3E, the user should make the special statement when order the equipments.

外形尺寸图 Dimensions Figure

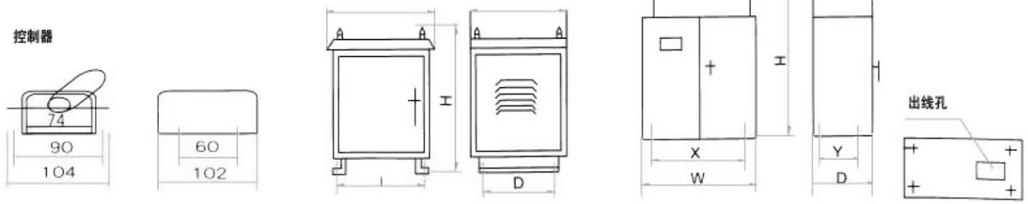

电控设备
Electronic control equipment

设备成套性 Set feature of the equipment

配套设备 Support equipments		数量 Quantity									外形及安装参考尺寸（mm） Appearance and installation reference dimension (mm)					安装孔 Installation hole	单台重量（kg） Weight of single set
名称 Name	型号 Model	STML-3E-C	STML-4E-C	STML-7E-C	STML-9E-C	STML-14E-C	STML-19E-C	STML-25E-C	STML-32E-C	STML-38E-C	W	D	H	X	Y		
整流控制设备 Rectifier control equipment	STML-3E-C										700	450	1300	650	410	4-Φ12	130
	STML-4E-C		1														
	STML-7E-C			1													135
	STML-9E-C				1												180
	STQL-14E-C					1					900	450	1500	850	410	4-Φ14	230
	STQL-19E-C						1										240
	STQL-25E-C							1									280
	STQL-32E-C								1								320
	STQL-38E-C										1000	450	1500	950	410		250
主整流变压器 Main rectifier transformer	ZDG-3.5/0.5	1									变压器内附 Accessories in the transformer						
	ZDG-3.5/0.5		1														
	ZDG-5/0.5			1													
	ZDG-7/0.5				1												
	ZDG-11/0.5					1											
	ZDG-15/0.5						1										
	ZDG-20/0.5							1									
	ZDG-25/0.5								1								
	ZDG-35/0.5									1	600	510	675	500	410	4-Φ14	210
操控盒 Manipulation boxmipulation box	K03-15T	1									/						

电控设备
Electronic control equipment

强励磁控制方式整流控制设备 STQOL系列
Strong excitation control mode rectifier control equipment STQOL series

概述

STQOL系列产品具有吸料时强励磁（直流电压290伏），搬运时弱励磁（直流电压200伏）等特点，不仅可以降低电力消耗，而且可以使吸吊量增加，是搬运废钢等松散物料现场使用的理想配套设备，一般能使作业效率提高15-30%。

本系列产品当容量小于或等于30千瓦时，整流变压器内附。

型号说明 Model discription

STQOL—□E—□

- C为户内式，D为户外式 C is indoor type and D is outdoor type
- 带放电回路方式 Circuit mode with discharge
- 额定输出功率 Rated output power
- 带控制回路式 With control circuit mode
- 带强励磁方式 With strong excitation mode
- 三相桥式整流 Three-phase bridge rectifier
- 二极管整流方式 Diode rectification mode

控制方式与电压电流特性曲线
Control mode and voltage-current characteristic curve

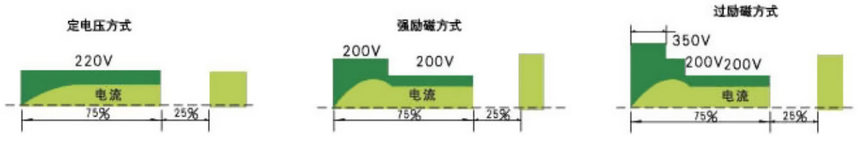

主要技术参数 Main technical data

主要参数 main parameters / 型号 Model	电源相数 Power phase	输入交流电压（V） AC input voltage	输入直流电压（V） DC input voltage	额定输出电流（A） Rated output current
STQOL-9E-□	三相	380	290/200	15.6/7.4
STQOL-14E-□	三相	380	290/200	24.2/11.5
STQOL-19E-□	三相	380	290/200	32.7/15.5
STQOL-25E-□	三相	380	290/200	43.4/20.7
STQOL-32E-□	三相	380	290/200	55.6/26.4
STQOL-38E-□	三相	380	290/200	66/31.6

选型及注意事项

控制器、变压器箱外形与STQ(M)L系列相同。

如用户需要350伏过励磁方式，应特别提出以便另行设计。达励磁方式为STQSOL系列。

Slection and notes

The appearance of the controller and transformer box is same with STQ (M)L series.

If the user needs 350V over-excitation mode, please raise it to facilitate the design. The strong excitation mode is STQSOL series.

电控设备
Electronic control equipment

主要技术参数 Main technical data

配套设备 Support equipments		数量 Quantity						外形及安装参考尺寸（mm） Appearance and installation reference dimension (mm)						单台重量（kg） Weight of single set
名称 Name	型号 Model	STQOL-9E-C	STQOL-14E-C	STQOL-19E-C	STQOL-25E-C	STQOL-32E-C	STQOL-38E-C	W	D	H	X	Y	安装孔 Instalation hole	
强力磁整流控制柜 Strong magnetic rectifier control cabinet	STQOL-9E-C	1						700	450	1300	650	410	4-Φ14	180
	STQOL-14E-C		1					1000	450	1700	950	410	4-Φ14	220
	STQOL-19E-C			1										260
	STQOL-25E-C				1									320
	STQOL-32E-C					1								380
	STQOL-38E-C						1	1000	450	1500	950	410	4-Φ14	260
主整流变压器 Main rectifier transformer	ZSG-11/0.5	1						变压器内附于强励整流控制柜 Accessories in the transformer						
	ZSG-11/0.5		1											
	ZSG-15/0.5			1										
	ZSG-25/0.5				1									
	ZSG-30/0.5					1								
	ZSG-40/0.5						1	550	480	625	450		380	495
操控盒 Meripulation boxmipulation box	K03-15T	1						/	/	/	/		/	6

外形尺寸图 Dimensions Figure

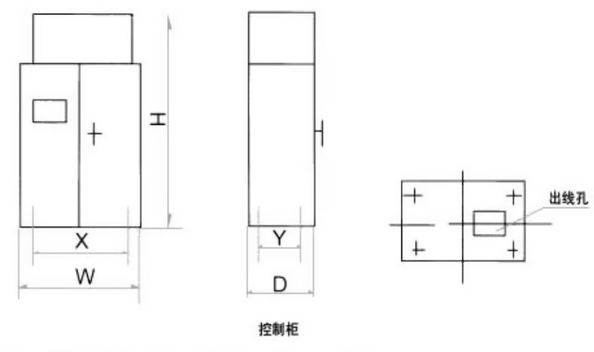

注：变压器、控制器外形尺寸图同STQ(M)L系列

Note: The appearance dimensions drawings of the transformer and controller is same with STQ(M)L series.

电控设备
Electronic control equipment

停电保磁设备 Power failure magnetic protection equipment

概述

起重电磁铁停电保磁设备既是超重电磁铁作的馈电整流控制设备，又是其作业现场的安全保障系统。它能在起重电磁工作的同时自动对备用直电源强、浮充电管理，保证备用电源处于最佳工作状态。当起重电磁铁处于吸料状态而又遇电网供电故障时，能自动切换电源，保证超重电磁铁的被吸物不致下落，从而保证作业现场的其他设备及人身安全。它广泛用于冶金、港口等行业。

特点

设备成套性好，配有专门的充电设备及完善的显示检测报警装置。

采用全密封免维护铅酸蓄电池，具有放电售率高，使用寿命长、无需人员维护等优点。

在起重电磁铁处于吸料状态而又遇电网供电故障时，能自动切换电源，保证起重电磁铁的被吸物不致下落，同时发出警报，确保作业现场设备及人身安全。

在保证起重电磁铁的被吸物不致下落的同时，可控制打开起重设备提升机构的直流电磁抱闸，将被吸物安全放至地面。

Profile

The lifting electromagnet power outage magnetic protection equipment is not only the feed rectifier control equipment made by the overweight electromagnet, but also is the security control system onsite. It can manage the standby DC power supply and floating charge when the lifting electromagnetism is working, and ensure that the standby power supply is in the best working condition. When the lifting electromagnet is in the condition of absorbing the materials and encounters the power supply failure of the power grid, it can switch the power supply automatically and ensure that the objects absorbed by the overweight electromagnet is not fallen to ensure the safety of other equipments and the workers on site. It is widely applied in metallurgy, ports and other industries.

Feature

The set feature of the equipment is good, and it is equipped with the special charging equipment and complete alarm device showing the detection.

Use the sealed maintenance-free lead-aid battery with high rate of discharge, long life, maintenance without the staff and other advantages.

When the lifting electromagnet is in the condition of absorbing the materials and encounters the power supply failure of the power grid, it can switch the power supply automatically and ensure that the objects absorbed by the overweight electromagnet is not fallen and give the alarm to ensure the safety of other equipments and the workers on site.

When ensure that the object absorbed by the lifting electromagnet, the DC electromagnetism which can open the lifting mechanism of the lifting equipment, the absorbed object should be put to the ground.

型号说明 GTB 8系列停电保磁设备
Model discription

G(P)TB□—□/□Q

- 强励磁方式 Strong excitation mode
- 保磁时间（分钟）Magnetic protection time (minutes)
- 额定输出电流 Rated output current
- 设计序号 Design series number
- 类组代号：G为框式结构 P为屏式结构 TB为控电保磁设备 — Group code: G is the fram structure P is the screen structure TB is the power control magnetic protection equipment

主要技术参数 Main technical data

型号 \ 主要参数	电源相数	输入电压(V)	输入电压(V)	输出电流(A)
GTB8-40/20	三相	380	DC220	40
GTB8-60/20	三相	380	DC220	60
GTB8-100/20	三相	380	DC220	100
GTB8-150/20	三相	380	DC220	150
GTB8-200/20	三相	380	DC220	200

电控设备
Electronic control equipment

设备成套性 Set feature of the equipment

配套设备 Support equipments		数量 Quantity					外形及安装参考尺寸（mm） Appearance and installation reference dimension (mm)						单台重量（kg） Weight of single set
名称 Name	型号 Model	GTB8-40/20	GTB8-6020	GTB8-1020	GTB8-1520	GTB8-2020	W	D	H	X	Y	安装孔 Installation hole	
整流控制设备 Rectifier control equipment	GTB8-40/20	1					1000	500	1600	900	420	4-Φ14	100
	GTB8-60/20		1										110
	GTB8-100/20			1									140
	GTB8-150/20				1								160
	GTB8-200/20					1							180
主整流变压器 Main rectifier transformer	ZSG-11/0.5	1					600	300	570	430	450	4-Φ14	60
	ZSG-15/0.5		1										80
	ZSG-30/0.5			1			720	325	610	555	480		100
	ZSG-350.5				1								120
	ZSG-45/0.5					1							140
蓄电池 Battery	NP12-40	18					197	165	170				248
	NP12-65		18				350	166	174				378
	NP12-100			18			407	173	242				576
	NP12-150				18		484	170	242				864
	NP12-200					18	520	240	245				1170
表计箱电池架报警器控制器 Manipulation boxmipulation box	MBP-211S	1					350	250	150	280	180	4-Φ6	3
	JFM	1										4-Φ14	50
	LET-1001J	1										4-Φ3	0.5
	K03-15T	1										4-Φ6	0.5

选型及注意事项

电磁铁电压与整流控制设备的输出电压相同；

电磁铁定功率应不大于整流控制设备的额定输出功率；

Selection and notes

The voltage of the electromagnet is same with the output voltage of the rectifier control equipment;

The rated power of the electromagnet should be not more than the rated output power of the rectifier control equipment;

外形尺寸图

控制柜、变压器、控制器外形尺寸图同STQL系列。

Appearance dimension drawing

The appearance dimension drawings of the control cabinet, transformer and controller are same with STQL series.

电控设备
Electronic control equipment

调磁保磁控制设备 LPB2系列
Magnetic tune and magnetic protection control equipment LPB2 series

概述

起重电磁铁调磁保磁控制设备既是超重电磁铁作业的馈电整流控制设备，又是其作业现场的安全保障系统。它能在起重电磁铁工作的同时自动对备用直流电源强、浮充电管理，保证务用电源处于最佳状态。当起重电磁铁处于吸料状态而又遇电网供电故障时，能自动切换电源，保证起重电磁铁的被吸物不致下落，从而保证作业现场的其他设备及人身安全。它广泛应用于冶金、港口等行业。

特点

设备成套性好，配有数字电位调磁装置，输出电压可在0~240伏无级调整，及专门的充电设备及完善的显示检测报警装置。

采用全密封免维护铅酸蓄电池，具有放电售率高，使用寿命长、无需人员维护等优点。

在起重电磁铁处于吸料状态而又遇电网供电故障时，能自动切换电源，保证起重电磁铁的被吸物不致下落，同时发出警报，确保作业现场设备及人身安全。

在保证起重电磁铁的被吸物不致下落的同时，可控制打开起重设备提升机构的直流电磁抱闸，将被吸物安全放至地面。

Profile

The lifting electromagnet magnetic tune and magnetic protection control equipment is not only the feed rectifier control equipment made by the overweight electromagnet, but also is the security control system onsite. It can manage the standby DC power supply and floating charge when the lifting electromagnetism is working, and ensure that the standby power supply is in the best working condition. When the lifting electromagnet is in the condition of absorbing the materials and encounters the power supply failure of the power grid, it can switch the power supply automatically and ensure that the objects absorbed by the overweight electromagnet is not fallen to ensure the safety of other equipments and the workers on site. It is widely applied in metallurgy, ports and other industries.

Feature:

The set feature of the equipment is good, and it is equipped with the electric potential magnetic tune devices. The output voltage can be adjusted without stages in the range of 0~240V, and it is equipped with the charging equipment and complete alarm device showing the detection.

Use the sealed maintenance-free lead-aid battery with high rate of discharge, long life, maintenance without the staff and other advantages.

When the lifting electromagnet is in the condition of absorbing the materials and encounters the power supply failure of the power grid, it can switch the power supply automatically and ensure that the objects absorbed by the overweight electromagnet is not fallen and give the alarm to ensure the safety of other equipments and the workers on site.

When ensure that the object absorbed by the lifting electromagnet, the DC electromagnetism which can open the lifting mechanism of the lifting equipment, the absorbed object should be put to the ground.

型号说明 Model discription

LP B 2 — □ — F — □

- C为户内式 C is indoor type and
- D为户外式 D is outdoor type
- P为屏式 P is the screen type
- 放电回路方式 Discharge circuit wat
- 额定输出功率 Rated output power
- 设计序号 Design series number
- 保磁功能 Magnetic protection function
- 调磁功能 Magnetic tune function

主要技术参数 Main technical data

型号 Model \ 主要参数 main parameters	电源相数 Number of phase of power supply	输入交流电压(V) Input AC voltage (V)	输入直流电压(V) Input DC voltage (V)	额定输出电流(A) Rated output current (A)
LPB2-7F-C	三相	380	DC0~240	7
LPB2-15F-C	三相	380	DC0~240	15
LPB2-20F-C	三相	380	DC0~240	20
LPB2-30F-C	三相	380	DC0~240	30
LPB2-40F-C	三相	380	DC0~240	40

电控设备
Electronic control equipment

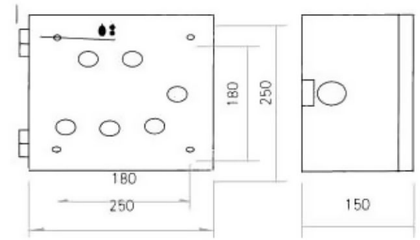

外形尺寸图

控制柜、变压器、同STQL系列操作盒外形尺寸图。

Appearance dimensions drawings of the control cabinet, transformer are same with the Manipulation box of STQL series.

设备成套性

配套设备 Support equipments		数量 Quantity					外形及安装参考尺寸（mm） Appearance and installation reference dimension (mm)						单台重量（kg） Weight of single set
名称 Name	型号 Model	LPB2-7F-C	LPB2-15F-C	LPB2-20F-C	LPB2-30F-C	LPB2-40F-C	W	D	H	X	Y	安装孔 Instalation hole	
整流控制设备 Rectifier control equipment	LPB2-7F-C	1					1000	500	1600	900	420	4-Φ14	100
	LPB2-15F-C		1										110
	LPB2-20F-C			1									140
	LPB2-30F-C				1								160
	LPB2-40F-C					1							180
整流变压器 Main rectifier transformer	ZSG-11/0.5	1					600	300	570	430	450	4-Φ14	60
	ZSG-20/0.5		1										80
	ZSG-25/0.5			1			720	325	610	555	480		100
	ZSG-35/0.5				1								120
	ZSG-45/0.5					1							140
蓄电池 Battery	NP12-40	18					197	165	170				248
	NP12-65		18				350	166	174				378
	NP12-100			18			407	173	242				576
	NP12-150				18		484	170	242				864
	NP12-200					18	520	240	245				1170
表计箱电池架报警器控制器 Alarm controller of meter box battery rack	MBP-211S	1					350	250	150	280	180	4-Φ6	3
	JFM	1										4-Φ14	50
	LET-1001J	1										4-Φ3	0.5
	C2H2	1										4-Φ6	0.5

电控设备
Electronic control equipment

无触点整流控制设备 XKMK系列
Contact-free Rectifier control Equipment XKMK Series

概述

XKMK系列无触点整流控制设备，具有当今国内先进水平。它采用两个三相全控整流电路反并接和无环流控制技术，为起重电磁铁提供正、反向直流电压，达到起重电磁铁励磁、消磁目的。

特点

该系列产品与用接触器控制的整流设备比较有如下特点：

可靠性、安全性高。设备动作无火花、无噪音、无机械触点，动作迅速；

节能，反向消磁时，摒弃传统的放电回路，采用有源逆变技术，电磁铁剩余能量回馈电网；节能明显，同时设备发热大大降低。

采用晶闸管模块控制正反向励磁，省去了传统的直流接触器，大大缩小了设备体积，以静开关方式替代动开关方式，延长了设备的使用寿命。

设备电源输入无相序要求，采用数字电子电拉技术，实现无级调磁。

Profile

XKMK series are advanced equipment in China because they adopt two 3-phase whole-process rectifiers connected inversely in parallel and the technology of non-circulating control, which provides forward and backward voltages to the lifting electromagnet for its magnetization and demagnetization.

Feature:

The products have the following features compared with contactor-control rectification equipment:

High reliability and safety; the movements of the equipment are faster and free of sparks, noises and mechanical contacts;

Energy-saving: Active inverting is adopted to replace traditional discharging circuit, thus the surplus energy of the electromagnet is fed back to the electric grid, resulting in energy conservation and reduction of the heating of the equipment.

Forward and backward magnetization is controlled by a thyristor module, which replaces DC contactor. This makes the size of the equipment much smaller. Service life of the equipment is longer thanks to the replacement of dynamic switching by static switching.

No phase order is required for the input of power supply of the equipment. And digital technology is employed to realize step-less magnetic adjustment.

型号说明 Model discription

XKMK -□-□

- C为户内式、D为户外式 C is indoor type and D is outdoor type
- 额定输出功率 Rated output power
- 无触点整流控制设备 Contact-free rectifier control equipment

外形尺寸图

整流变压器和控制器外形尺寸图STQL系列。

选型及注意事项

电磁铁额定电压与整流控制设备的输出电压相同。

电磁铁额定功率应不大于整流控制设备的额定输出功率。

当控制设备不需停电保护时，型号为LM系列。

Diagram of Dimensions

Diagram of Dimensions of Rectifier Transformer and Controller STQL Series

Selection and notes

The rated voltage of electromagnet equals to the output voltage of the rectifier control equipment.

The rated power of electromagnet shall not be larger than that of the rectifier control equipment.

When the control equipment needs no power-failure protection, the type is LM series.

主要技术参数 Main technical data

主要参数 main parameters / 型号 Model	电源相数 Power phase	输入交流电压（V） AC input voltage	输入直流电压（V） DC input voltage	额定输出电流（A） Rated output current
XKMK-9E-C	三相	380	DC290/215	≤9
XKMK-14E-C	三相	380	DC290/215	≤14
XKMK-19E-C	三相	380	DC290/215	≤19
XKMK-25E-C	三相	380	DC290/215	≤25
XKMK-32-C	三相	380	DC290/215	≤32
XKMK-38-C	三相	380	DC290/215	≤38

电控设备
Electronic control equipment

设备成套性

配套设备 Support equipments		数量 Quantity						外形及安装参考尺寸（mm） Appearance and installation reference dimension (mm)						单台重量（kg） Weight of single set
名称 Name	型号 Model	LMO-38E-C	LMO-32E-C	LMO-25E-C	LMO-19E-C	LMO-14E-C	LMO-9E-C	W	D	H	X	Y	安装孔 Installation hole	
整流控制设备	XKMK-9E-C	1						1000	500	1600	900	420	4-Φ14	100
	XKMK-14E-C		1											110
	XKMK-19E-C			1										110
	XKMK-25E-C				1									140
	XKMK-32E-C					1								160
	XKMK-38E-C						1							180
整流变压器	ZSG-11/0.5	1												60
	ZSG-15/0.5		1					600	300	570	430	450	4-Φ14	80
	ZSG-25/0.5			1										100
	ZSG-30/0.5				1			720	325	610	555	480		120
	ZSG-35/0.5					1								140
	ZSG-40/0.5						1							170
蓄电池	NP12-40	18						197	165	170				248
	NP12-65		18					350	166	174				378
	NP12-100			18				407	173	242				576
	NP12-100				18									
	NP12-150					18		484	170	242				864
	NP12-200						18	520	240	245				1170
表计箱电池架报警器控制器	MBP-211S	1						350	250	150	280	180	4-Φ6	3
	JFM	1											4-Φ14	50
	LET-1001J	1											4-Φ3	0.5
	K03-15T	1											4-Φ6	0.5

电控设备
Electronic control equipment

除铁器用整流控制设备 Rectifier control Equipment for Iron remover

概述

电磁除铁器整流控制设备是除铁器作业的馈作业的馈电控设备。它与除铁器配套使用。

我公司生产的电磁除铁器用及其整流控制设备在产品的性能和品种规格方面居国内领先地位，并已在宝钢、武钢、首钢、鞍钢、马钢等大型钢铁企业，以及矿山、轻工、火力发电厂、耐火材料、食品加工等行业使用，发挥着巨大的作用。

我公司生产的电磁除铁器用整流控制设备，采用户内、户外柜式防护结构，具有线路设计合理，保护功能齐全、信号显示醒目、维护保养方便、性能安全可靠等特点。

我公司生产该产品的元器件均选用国内重点生产厂家的名优产品，产品外形美观，内在质量良好，欢迎选用。

Profile

Used together with iron remover, this equipment is a for current feeding control in the operation of iron remover.
Electromagnetic iron remover and its rectifier control equipment produced by our company are advanced in China in terms of performance and variety of products. They are widely applied in such industries as steel-making, mining, light industry, thermal power generation, production of fire-proof materials and food processing. Prominent clients include: Baosteel, Wugang, Shougang, Angang and Magang.
The rectifier control equipment adopts indoor and outdoor cabinet-protection structure, featuring reasonable circuit design, complete protection function, clear signal presentation, easy repair and maintenance, safety and reliability.
Components for the production of the equipment are good products from key domestic producers, enabling the products to be beautiful in appearance, good in quality and widely recognized by clients.

圆形电磁除铁器、电磁轮用整流控制设备
Rectifier control Equipment for Round Electromagnetic Iron remover and Wheel

概述

本系列产品与连续工作制的园形，电磁轮、磁分离器配套使用。采用桥式整流方式，操作方式为柜门上按钮集中控制。

按其配套性可分为：单台配套型整流控制设备和两台配套整流控制设备。

按其结构可分为：户内防护式和户外防护式两种。

户外防护式采用双层柜式结构，具有防水、防尘、防腐性能，可长期用于露天作业。

Profile

These products are used together with round electromagnetic wheel and magnetic separator which adopt successive working system. The products employ bridge rectification and are controlled by means of the buttons on the door of the cabinet.
Categories as per number of set equipment: One-set and two-set type
Categories as per structure: Indoor and outdoor protection type
The outdoor protection type adopts double-layer cabinet structure. It can work outdoor over a long period of time because it is water-proof, dust-proof and corrosion-proof.

型号说明 Model discription

SST M (Q)—□□□

- D为户内式、W为户外式 D is indoor type and W is outdoor type.
- D为连续励磁（基本型） D is successive magnetization (basic type).
- D2为配电动小车控制方式 D2 is equipped with electric car.
- 设备输出最大容量 Max. capacity of equipment output
- 整流电压相数：M为单相380V Number of rectification voltage: M: single-phase 380V; Q为三相380V Q: 3-phase 380V;
- 硅二极管整流方式：电磁除铁器整流控制设备 Rectification method of silicon diode: Electromagnetic iron remover Ratification control equipment

主要技术参数 Main technical data

型号 Model \ 参数 main parameters		输入交流电压(V) AC input voltage	输出直流电压(V) Output DC voltage	容量(KW) Capacity	外形及安装参考尺寸 Shape and install the reference dimension W	D	H	X	Y	重量(kg) weight
户内防护式 Indoor protection type	SSTM-1.5D/48V-D	380	48	1.5	500	450	1200	466	310	180
	SSTM-1.5D-D	380	110	1.5	500	450	1200	466	310	180
	SSTM-3.1D-D			3.1						190
	SSTM-4.2D-D			4.2						210
	SSTM-6.2D-D		220	6.2						200
	SSTM-9.3D-D			9.3	700	530	1500	600	440	360
	SSTM-12D-D			12						380
户外防护式 Outdoor protection type	SSTM-1.5□□-W	380	110	1.5	770	590	1500	700	540	240
	SSTM-3.1□□-W			3.1						250
	SSTM-4.2□□-W			4.2						260
	SSTM-6.2□□-W		220	6.2						270
	SSTM-9.3□□-W			9.3	920	680	1570	750	650	520
	SSTM-12□□-W			12						560

电控设备
Electronic control equipment

外形尺寸图 Dimensions Figure

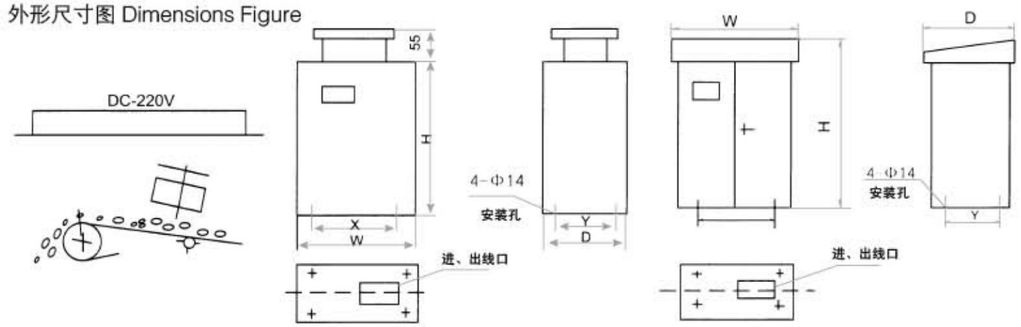

电磁除铁器用整流控制设备 MC12系列
Rectifier control Equipment for Electromagnetic Iron remover MC12 Series

概述

本系列产品与MC12和MC22系列除铁器配套使用，采用带变压器的桥式整流方式。分为连续供电、间断供电以及兼有以上两种功能供电方式的三大类产品。

操作方式为柜门上按钮集中控制，根据用户要求可配操作箱。

柜体结构分为户内防护式和户外式两种。用户可根据现场实际情况予以选用。

Profile

As supporting equipment for MC12 and MC22 iron removers, these products adopts bridge rectification with transformer. The products are divided into three types: successive power supply, intermittent power supply and the one combing the two functions. Buttons of the cabinet door are used for operation, and operating box can be equipped in accordance with desire of clients.
The cabinets are divided into indoor type and outdoor type, offering options for clients on the basis of the conditions on the site.

型号说明 Model discription

SST M (Q)—□D1□□—□

- D为户内式、W为户外式 D is indoor type and W is outdoor type.
- 用户特殊要求，系数由我厂设计部门定 Customized products are also available.
- T为配金属探测器 T is equipped with metal detector
- 交叉皮带式除铁器 Crossing-belt iron remover
- 设备输出最大容量 Max. capacity of equipment output
- 整流电压相数：M为单相380V Phase number of rectifying voltage: M is single-phase 380V; Q为三相380V Q is 3-phase 380V
- 硅二极管整流方式：电磁除铁器整流控制设备 Rectifying method of silicon diode: Rectifier control equipment for electromagnetic iron remover

外形尺寸图 Dimensions Figure

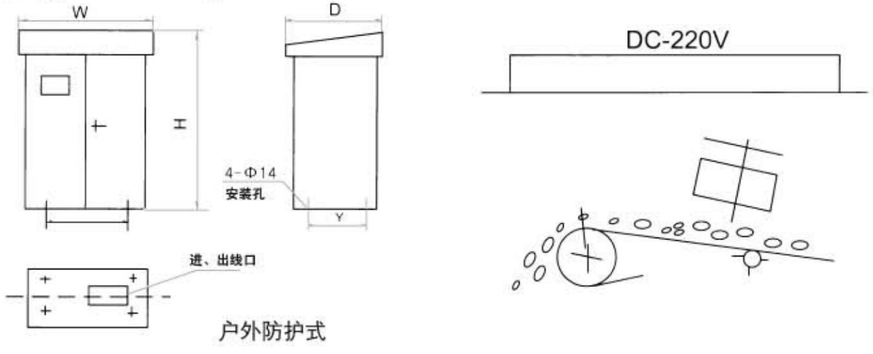

户外防护式

电控设备

Electronic control equipment

主要技术参数 Main technical data

型号 Model / 参数 main parameters		输入交流电压(V) AC input voltage	输出直流电压(V) Output DC voltage	容量 (KW) Capacity	外形及安装参考尺寸 Shape and install the reference dimension W	D	H	X	Y	重量(kg) weight
户内防护式 Indoor protection type	SSTM-1.5D1-D	380	110	1.5/1.5	500	450	1200	466	310	150
	SSTM-3.1D1-D			3.1/2.2						160
	SSTM-4.2D1-D			4.2/2.2						180
	SSTM-6.2D1-D		220	6.2/4	700	530	1500	600	440	300
	SSTM-9.3D1-D			9.3/4	900			800		360
	SSTM-12D1-D			12/5.5						380
	SSTM-25D1-D			25/5.5						510

选型及注意事项

以所配电磁除铁器冷态消耗功率不大于整流控制设备的额定容量为原则。

从节能等方面考虑，在成套设备中增加金属探测器。正常状态时由金属探测器检测铁件，发出信号控制电磁除铁器短时工作一定时间（约20秒）。如果金属探测器发出故障（或原料中铁件较多）可由人工将整流控制方式转换成连续供电方式。

Selection and notes

Cold-state power consumption of the equipped iron remover shall not be higher than the rated capacity of the rectifier control equipment.

A metal detector is added in a set of equipment for the purpose of energy-conservation. While in normal working condition, the detector detects iron pieces, sends out signal for the iron remover to work for a period of time (about 20 seconds). In case the detector breaks down (or too many iron pieces in the raw materials), switch manually the rectifier control method to the mode of successive power supply.

主要技术参数 Main technical data

型号 Model / 参数 main parameters		输入交流电压(V) AC input voltage	输出直流电压(V) Output DC voltage	容量 (KW) Capacity	外形及安装参考尺寸 Shape and install the reference dimension W	D	H	X	Y	重量(kg) weight
户内防护式 Indoor protection type	SSTM-1.5D1T-D	380	110	1.5	700	530	1500	600	440	200
	SSTM-3.1D1T-D			3.1						210
	SSTM-4.2D1T-D			4.2						230
	SSTM-6.2D1T-D		220	6.2	900			800		270
	SSTQ-9.3D1T-D			9.3						300
	SSTQ-12D1T-D			12						400
	SSTQ-25D1T-D			25	1000	540	1940	960	300	600
户外防护式 Outdoor protection type	SSTM-1.5D1T-W	380	110	1.5	770	590	1500	700	540	250
	SSTM-3.1D1T-W			3.1						260
	SSTM-4.2D1T-W			4.2						280
	SSTM-6.2D1T-W		220	6.2						310
	SSTQ-9.3D1T-W			9.3	920	680	1570	750	650	350
	SSTQ-12D1T-D			12						470
	SSTQ-25D1T-D			25						670

成套设备中必须配用金属探测器，只有当金属探测器发出信号时，才给电磁除铁器馈电，将铁件剔除。本系列产品采用带整流变压器的桥式整流方式，节能、高效。

A metal detector must be equipped in an equipment of a set. Power is only supplied to the iron remover only when the detector sends out signals for the iron remover to get rid of the iron. These products are energy-saving and efficient thanks its bridge rectification with rectification transformer.

选型及注意事项

以所配电磁除铁器冷态消耗功率不大于整流控制设备的额定容量为原则。

Selection and notes

Cold-state power consumption of the equipped iron remover shall not be higher than the rated capacity of the rectifier control equipment.